CIVIL TRANSIT SYSTEM INSTALLATION INSTRUCTIONS

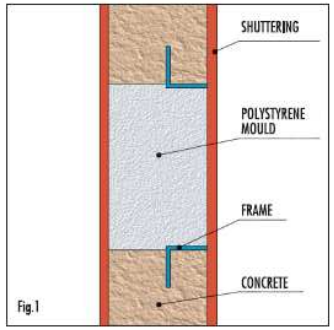

1. The frame can be cast directly into a wall or floor.

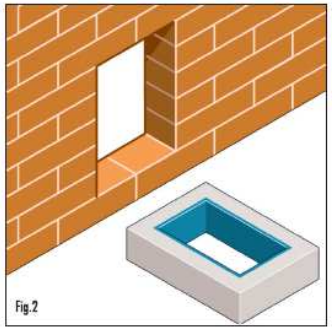

2. The frame may be cast into a concrete jacket this method being normally used for brick and blockwork walls which in turn is fixed into the wall or floor.

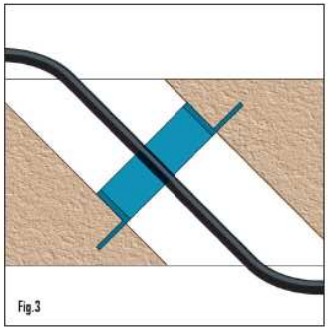

3. Where transits are for cables of a large diameter, inclined installations of the frame is advisable to reduce the bending radius.

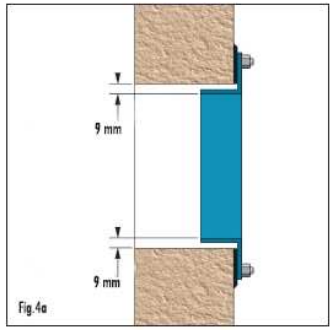

4. Frames can be bolted to floors and walls in either of the options shown. For bolted installations mastic should be inserted between the frames flange and the structure. Use Hawke mastic Ref. 966.
When frames are reverse fixed then 9mm clearance is required to all faces.
Hawke recommend a minimum of 1 hole per corner set 25mm in from outside edge of frame with additional fixings at a max of 200mm centres.

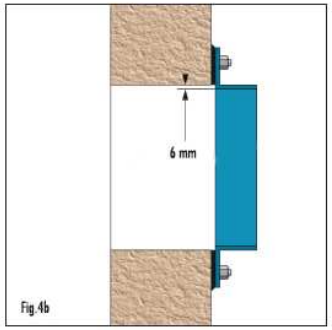

Size of fixing holes and type of fastener are to be established by the civil contractor dependent on size of frame weight and structure to which it is to be fixed.

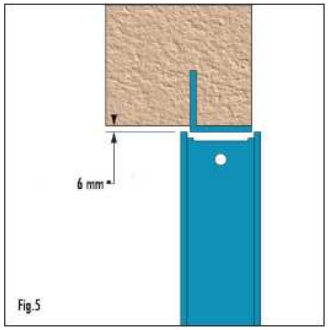

5. Stayplates and compression plates have retaining lugs. Clearance for these must be allowed when a frame is cast into a structure. This allowance is 12mm and should be added to the total internal width of the frame to obtain the correct dimensions. Hawke Moulds have this allowance built in. (See Page 10).

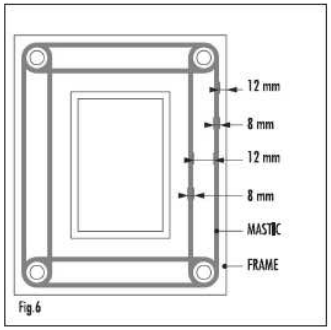

Mastic Application
Each 330ml tube of mastic should be sufficient to mount and seal 3 individual frames or a multiple frame of up to 4 apertures
1.Prior to application of sealant ensure that faces to be sealed are dry and free from grease and any loose material, ensure that transit frame mates up with any fixings/holes already present checking especially the aperture over which the frame is to be mounted.
2.Cut nozzle on mastic to produce a bead diameter of approximately 8mm.
3.Apply two parallel rows of mastic and run a bead of mastic around each hole as shown in Fig.6.

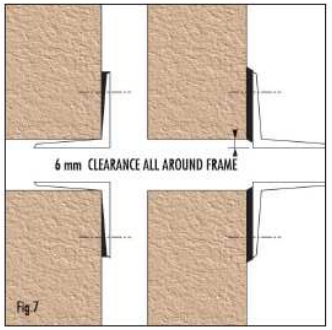

4.The mastic can be applied to front or rear of the frame dependant on the installation, see Fig.7.
5.The frame can now be placed over its fixings and the fasteners tightened to clamp the frame to the wall. In tightening the fixtures the mastic should be extruded out of the decreasing gap between frame and structure, any excess should be removed and disposed of. When tightened up to the required amount, the mastic should be faced off to the frame leaving a fillet of mastic around the internal and external edges of the frame. See Fig.7 above.

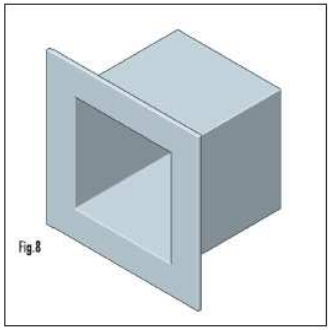

Lightweight sheet steel backing plates are available to be used in conjunction with Hawke Civil Frames. These maintain the openings through the walls and floors and add to the finished appearance of the installation.

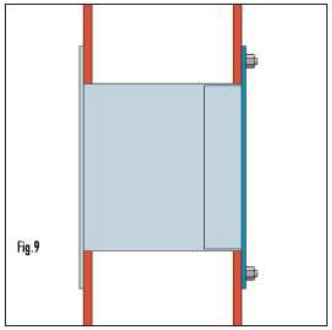

It should be noted that the backing plates do not add to the fire resistance of a transit assembly and should not be used to stop fire spread in cavity walls.
Backing plates are produced in standard lengths for wall thickness of 60mm to 200mm for sizes 2, 4, 6 and 8 frames plus multiples thereof, but specials can be made.
Please state thickness of wall when ordering.

Hawke
Civil Transit System

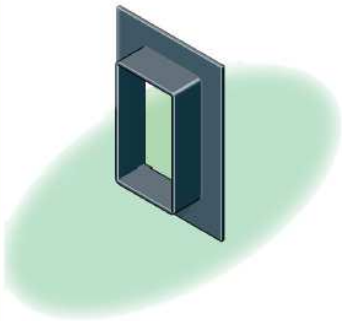

Installations and Applications

There are several methods which can be used to install Hawke Frames, each method giving an inspectable professional finish to any cable penetration.
When fixing frames to concrete/brick type structures care should be taken if using expanding type fixings as they could burst into the aperture.
For Hawke Frames which are cast into a wall or floor it is recommended that a Hawke Polystyrene Mould is used.
Frames and moulds require support to ensure that the correct position is maintained whilst the concrete is being poured. This may be achieved by nailing through the shuttering into the mould.
Hawke Moulds are available to suit sizes 2, 4, 6 and 8 frames with 300mm lengths and may be cut to suit the depth of the wall or floor as required.