User's manual
FLIR Exx series

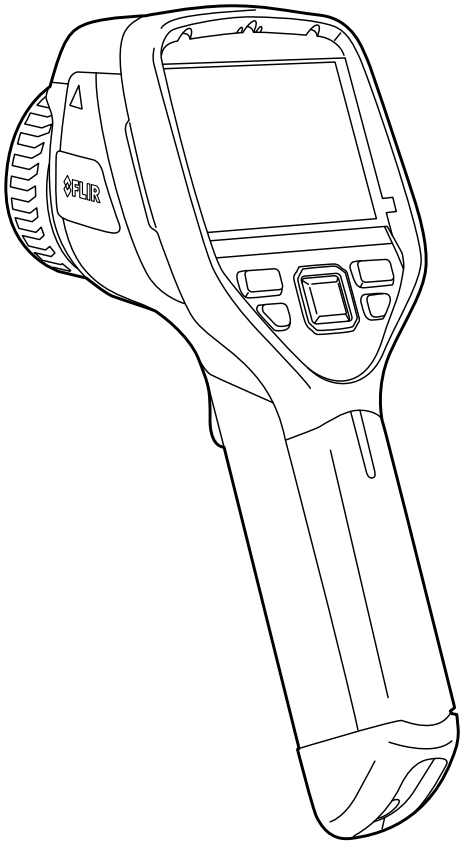

User's manual
FLIR Exx series

Table of contents

1 Disclaimers ... 1
1.1 Legal disclaimer ... 1
1.2 Usage statistics ... 1
1.3 Changes to registry ... 1
1.4 U.S. Government Regulations ... 1
1.5 Copyright ... 1
1.6 Quality assurance ... 1
1.7 Patents ... 1
1.8 EULA Terms ... 1
1.9 EULA Terms ... 1
2 Safety information ... 3
3 Notice to user ... 7
3.1 User-to-user forums ... 7
3.2 Calibration ... 7
3.3 Accuracy ... 7
3.4 Disposal of electronic waste ... 7
3.5 Training ... 7
3.6 Documentation updates ... 7
3.7 Important note about this manual ... 7
3.8 Note about authoritative versions ... 7
4 Customer help ... 8
4.1 General ... 8
4.2 Submitting a question ... 8
4.3 Downloads ... 9
5 Quick Start Guide ... 10
5.1 Procedure ... 10
6 List of accessories and services ... 11
7 Camera parts ... 13
7.1 View from the right ... 13
7.1.1 Figure ... 13
7.1.2 Explanation ... 13
7.2 View from the left ... 14
7.2.1 Figure ... 14
7.2.2 Explanation ... 14
7.3 LCD and keypad ... 15
7.3.1 Figure ... 15
7.3.2 Explanation ... 15
7.4 View from the bottom ... 16
7.4.1 Figure ... 16
7.4.2 Explanation ... 16
7.5 Battery condition LED indicator ... 17
7.5.1 Figure ... 17
7.5.2 Explanation ... 17
7.6 Laser pointer ... 18
7.6.1 Figure ... 18
7.6.2 Laser warning label ... 18
7.6.3 Laser rules and regulations ... 18
8 Screen elements ... 19
8.1 Figure ... 19
8.2 Explanation ... 19
9 Navigating the menu system ... 20
9.1 Figure ... 20
9.2 Explanation ... 20

10 Connecting external devices and storage media 21
10.1 Figure 21
10.2 Explanation 21
10.3 Figure 22
10.4 Explanation 22
11 Pairing Bluetooth devices 23
11.1 General 23
11.2 Procedure 23
12 Configuring Wi-Fi 24
12.1 General 24
12.2 Setting up a peer-to-peer connection (most common use) 24
12.3 Connecting the camera to a wireless local area network (less common use) 24
13 Handling the camera 25
13.1 Charging the battery 25
13.1.1 Using the power supply to charge the battery 25
13.1.2 Using the stand-alone battery charger to charge the battery 25
13.2 Turning on and turning off the camera 25
13.3 Adjusting the infrared camera focus 26
13.3.1 Figure 26
13.3.2 Procedure 26
13.4 Operating the laser pointer 27
13.4.1 Figure 27
13.4.2 Procedure 27
13.5 Removing the battery 27
13.6 Mounting an accessory lens 28
13.7 Calibrating the touchscreen 29
13.7.1 Figure 29
13.7.2 Procedure 29
13.8 Using the camera lamp 29
13.8.1 General 29
13.8.2 Procedure 30
14 Working with images 31
14.1 Saving an image 31
14.1.1 General 31
14.1.2 Image capacity 31
14.1.3 Naming convention 31
14.1.4 Procedure 31
14.2 Previewing an image 31
14.2.1 General 31
14.2.2 Procedure 31
14.3 Opening a saved image 32
14.3.1 General 32
14.3.2 Procedure 32
14.4 Editing a saved image 32
14.4.1 General 32
14.4.2 Procedure 32
14.5 Adjusting an infrared image 32
14.5.1 General 32
14.5.2 Example 1 33
14.5.3 Example 2 33
14.5.4 Manual adjustment in *Level / span* mode 33
14.5.5 Manual adjustment in *Level / max / min* mode 34
14.6 Performing a non-uniformity correction (NUC) 34

14.6.1 What is a non-uniformity correction? ... 34
14.6.2 When to perform a non-uniformity correction? ... 34
14.6.3 Procedure ... 34
14.7 Changing the temperature range ... 34
14.7.1 General ... 34
14.7.2 Procedure ... 34
14.8 Changing the color palette ... 35
14.8.1 General ... 35
14.8.2 Procedure ... 35
14.9 Zooming in on an image ... 35
14.9.1 General ... 35
14.9.2 Procedure ... 35
14.10 Deleting an image ... 35
14.10.1 Procedure ... 35
14.11 Deleting all images ... 36
14.11.1 Procedure ... 36
15 Working with image modes ... 37
15.1 General ... 37
15.2 Types of image modes ... 37
15.3 Procedure ... 38
16 Working with measurement tools ... 39
16.1 Laying out measurement tools in live mode ... 39
16.1.1 General ... 39
16.1.2 Procedure ... 39
16.2 Laying out measurement tools in edit mode ... 39
16.2.1 General ... 39
16.2.2 Procedure ... 39
16.3 Moving and resizing measurement tools ... 40
16.3.1 General ... 40
16.3.2 Procedure ... 40
16.4 Displaying maximum, minimum, and average values ... 40
16.4.1 General ... 40
16.4.2 Procedure ... 40
16.5 Setting local measurement parameters for a measurement tool ... 41
16.5.1 General ... 41
16.5.2 Procedure ... 41
17 Working with alarms ... 42
17.1 Working with color alarms ... 42
17.1.1 General ... 42
17.1.2 Procedure ... 42
17.2 Working with insulation alarms ... 42
17.2.1 General ... 42
17.2.2 Procedure ... 42
17.3 Working with condensation alarms ... 43
17.3.1 General ... 43
17.3.2 Procedure ... 43
18 Fetching data from external FLIR meters ... 44
18.1 General ... 44
18.2 Supported meters ... 44
18.3 Technical support for external meters ... 44
18.4 Procedure ... 44
18.5 Typical moisture measurement and documentation procedure ... 44
18.5.1 General ... 44

18.5.2 Procedure ... 44

19 Annotating images ... 45

19.1 General ... 45
19.2 Adding a note ... 45
19.2.1 General ... 45
19.2.2 Procedure ... 45
19.3 Adding a table ... 45
19.3.1 General ... 45
19.3.2 Procedure ... 46
19.4 Adding a voice annotation ... 46
19.4.1 General ... 46
19.4.2 Procedure ... 46

20 Recording video clips ... 47

20.1 General ... 47
20.2 Procedure: Recording a video clip ... 47
20.3 Procedure: Playing a video clip ... 47

21 Screening alarm ... 48

21.1 General ... 48
21.2 Procedure ... 48

22 Changing settings ... 49

22.1 General ... 49
22.2 Procedure ... 49
22.3 Description of the various settings ... 49
22.3.1 Measurement parameters ... 49
22.3.2 Save options ... 50
22.3.3 Add-on lens ... 50
22.3.4 Device settings ... 50

23 Technical data ... 52

23.1 Online field-of-view calculator ... 52
23.2 Note about technical data ... 52
23.3 Note about authoritative versions ... 52
23.4 FLIR E33 ... 53
23.5 FLIR E40 ... 58
23.6 FLIR E40 (incl. Wi-Fi) ... 63
23.7 FLIR E40 with SC kit (incl. Wi-Fi and 45° lens) ... 68
23.8 FLIR E40 with SC kit (incl. Wi-Fi) ... 73
23.9 FLIR E40bx (incl. Wi-Fi) ... 78
23.10 FLIR E50 ... 83
23.11 FLIR E50 (incl. Wi-Fi) ... 88
23.12 FLIR E50bx (incl. Wi-Fi) ... 93
23.13 FLIR E60 ... 98
23.14 FLIR E60 (incl. Wi-Fi) ... 103
23.15 FLIR E60 with Educational kit (DE) ... 108
23.16 FLIR E60 with Educational kit (EN) ... 109
23.17 FLIR E60 with Educational kit (ES) ... 110
23.18 FLIR E60 with Educational kit (FR) ... 111
23.19 FLIR E60 with Educational kit (IT) ... 112
23.20 FLIR E60 with Educational kit (JA) ... 113
23.21 FLIR E60 with Educational kit (KO) ... 114
23.22 FLIR E60bx (incl. Wi-Fi) ... 115
23.23 FLIR E63 (incl. Wi-Fi) ... 120

24 Mechanical drawings ... 125
25 CE Declaration of conformity ... 130
26 Cleaning the camera ... 132
26.1 Camera housing, cables, and other items ... 132
26.1.1 Liquids ... 132
26.1.2 Equipment ... 132
26.1.3 Procedure ... 132
26.2 Infrared lens ... 132
26.2.1 Liquids ... 132
26.2.2 Equipment ... 132
26.2.3 Procedure ... 132
27 Application examples ... 133
27.1 Moisture & water damage ... 133
27.1.1 General ... 133
27.1.2 Figure ... 133
27.2 Faulty contact in socket ... 133
27.2.1 General ... 133
27.2.2 Figure ... 133
27.3 Oxidized socket ... 134
27.3.1 General ... 134
27.3.2 Figure ... 134
27.4 Insulation deficiencies ... 135
27.4.1 General ... 135
27.4.2 Figure ... 135
27.5 Draft ... 135
27.5.1 General ... 135
27.5.2 Figure ... 135
28 About FLIR Systems ... 137
28.1 More than just an infrared camera ... 138
28.2 Sharing our knowledge ... 138
28.3 Supporting our customers ... 138
29 Glossary ... 140
30 Thermographic measurement techniques ... 143
30.1 Introduction ... 143
30.2 Emissivity ... 143
30.2.1 Finding the emissivity of a sample ... 143
30.3 Reflected apparent temperature ... 146
30.4 Distance ... 147
30.5 Relative humidity ... 147
30.6 Other parameters ... 147
31 History of infrared technology ... 148
32 Theory of thermography ... 151
32.1 Introduction ... 151
32.2 The electromagnetic spectrum ... 151
32.3 Blackbody radiation ... 151
32.3.1 Planck’s law ... 152
32.3.2 Wien’s displacement law ... 153
32.3.3 Stefan-Boltzmann's law ... 154
32.3.4 Non-blackbody emitters ... 155
32.4 Infrared semi-transparent materials ... 157
33 The measurement formula ... 158
34 Emissivity tables ... 162
34.1 References ... 162
34.2 Tables ... 162

1 Disclaimers

1.1 Legal disclaimer

All products manufactured by FLIR Systems are warranted against defective materials and workmanship for a period of one (1) year from the delivery date of the original purchase, provided such products have been under normal storage, use and service, and in accordance with FLIR Systems instruction.

Uncooled handheld infrared cameras manufactured by FLIR Systems are warranted against defective materials and workmanship for a period of two (2) years from the delivery date of the original purchase, provided such products have been under normal storage, use and service, and in accordance with FLIR Systems instruction, and provided that the camera has been registered within 60 days of original purchase.

Detectors for uncooled handheld infrared cameras manufactured by FLIR Systems are warranted against defective materials and workmanship for a period of ten (10) years from the delivery date of the original purchase, provided such products have been under normal storage, use and service, and in accordance with FLIR Systems instruction, and provided that the camera has been registered within 60 days of original purchase.

Products which are not manufactured by FLIR Systems but included in systems delivered by FLIR Systems to the original purchaser, carry the warranty, if any, of the particular supplier only. FLIR Systems has no responsibility whatsoever for such products.

The warranty extends only to the original purchaser and is not transferable. It is not applicable to any product which has been subjected to misuse, neglect, accident or abnormal conditions of operation. Expendable parts are excluded from the warranty.

In the case of a defect in a product covered by this warranty the product must not be further used in order to prevent additional damage. The purchaser shall promptly report any defect to FLIR Systems or this warranty will not apply.

FLIR Systems will, at its option, repair or replace any such defective product free of charge if, upon inspection, it proves to be defective in material or workmanship and provided that it is returned to FLIR Systems within the said one-year period.

FLIR Systems has no other obligation or liability for defects than those set forth above.

No other warranty is expressed or implied. FLIR Systems specifically disclaims the implied warranties of merchantability and fitness for a particular purpose.

FLIR Systems shall not be liable for any direct, indirect, special, incidental or consequential loss or damage, whether based on contract, tort or any other legal theory.

This warranty shall be governed by Swedish law.

Any dispute, controversy or claim arising out of or in connection with this warranty, shall be finally settled by arbitration in accordance with the Rules of the Arbitration Institute of the Stockholm Chamber of Commerce. The place of arbitration shall be Stockholm. The language to be used in the arbitral proceedings shall be English.

1.2 Usage statistics

FLIR Systems reserves the right to gather anonymous usage statistics to help maintain and improve the quality of our software and services.

1.3 Changes to registry

The registry entry HKEY_LOCAL_MACHINE\SYSTEM\CurrentControlSet\Control\Lsa\LmCompatibilityLevel will be automatically changed to level 2 if the FLIR Camera Monitor service detects a FLIR camera connected to the computer with a USB cable. The modification will only be executed if the camera device implements a remote network service that supports network logons.

1.4 U.S. Government Regulations

This product may be subject to U.S. Export Regulations. Please send any inquiries to exportquestions@flir.com.

1.5 Copyright

© 2016, FLIR Systems, Inc. All rights reserved worldwide. No parts of the software including source code may be reproduced, transmitted, transcribed or translated into any language or computer language in any form or by any means, electronic, magnetic, optical, manual or otherwise, without the prior written permission of FLIR Systems.

The documentation must not, in whole or part, be copied, photocopied, reproduced, translated or transmitted to any electronic medium or machine readable form without prior consent, in writing, from FLIR Systems.

Names and marks appearing on the products herein are either registered trademarks or trademarks of FLIR Systems and/or its subsidiaries. All other trademarks, trade names or company names referenced herein are used for identification only and are the property of their respective owners.

1.6 Quality assurance

The Quality Management System under which these products are developed and manufactured has been certified in accordance with the ISO 9001 standard.

FLIR Systems is committed to a policy of continuous development; therefore we reserve the right to make changes and improvements on any of the products without prior notice.

1.7 Patents

One or several of the following patents and/or design patents may apply to the products and/or features. Additional pending patents and/or pending design patents may also apply.

000279476-0001; 000439161; 000499579-0001; 000653423; 000726344; 000859020; 001106306-0001; 001707738; 001707746; 001707787; 001776519; 001954074; 002021543; 002058180; 002249953; 002531178; 0600574-8; 1144833; 1182246; 1182620; 1285345; 1299699; 1325808; 1336775; 1391114; 1402918; 1404291; 1411581; 1415075; 1421497; 1458284; 1678485; 1732314; 2106017; 2107799; 2381417; 3006596; 3006597; 466540; 483782; 484155; 4889913; 5177595; 60122153.2; 602004011681.5-08; 6707044; 68657; 7034300; 7110035; 7154093; 7157705; 7237946; 7312822; 7332716; 7336823; 7544944; 7667198; 7809258 B2; 7826736; 8,153,971; 8,823,803; 8,853,631; 8018649 B2; 8212210 B2; 8289372; 8354639 B2; 8384783; 8520970; 8565547; 8595689; 8599262; 8654239; 8680468; 8803093; D540838; D549758; D579475; D584755; D599,392; D615,113; D664,580; D664,581; D665,004; D665,440; D677298; D710,424 S; D718801; DI6702302-9; DI6903617-9; DI7002221-6; DI7002891-5; DI7002892-3; DI7005799-0; DM/057692; DM/061609; EP 2115696 B1; EP2315433; SE 0700240-5; US 8340414 B2; ZL 201330267619.5; ZL01823221.3; ZL01823226.4; ZL02331553.9; ZL02331554.7; ZL200480034894.0; ZL200530120994.2; ZL200610088759.5; ZL200630130114.4; ZL200730151141.4; ZL200730339504.7; ZL200820105768.8; ZL200830128581.2; ZL200880105236.4; ZL200880105769.2; ZL200930190061.9; ZL201030176127.1; ZL201030176130.3; ZL201030176157.2; ZL201030595931.3; ZL201130442354.9; ZL201230471744.3; ZL201230620731.8.

1.8 EULA Terms

- You have acquired a device (“INFRARED CAMERA”) that includes software licensed by FLIR Systems AB from Microsoft Licensing, GP or its affiliates (“MS”). Those installed software products of MS origin, as well as associated media, printed materials, and “online” or electronic documentation (“SOFTWARE”) are protected by international intellectual property laws and treaties. The SOFTWARE is licensed, not sold. All rights reserved.
- IF YOU DO NOT AGREE TO THIS END USER LICENSE AGREEMENT (“EULA”), DO NOT USE THE DEVICE OR COPY THE SOFTWARE. INSTEAD, PROMPTLY CONTACT FLIR Systems AB FOR INSTRUCTIONS ON RETURN OF THE UNUSED DEVICE(S) FOR A REFUND. **ANY USE OF THE SOFTWARE, INCLUDING BUT NOT LIMITED TO USE ON THE DEVICE, WILL CONSTITUTE YOUR AGREEMENT TO THIS EULA (OR RATIFICATION OF ANY PREVIOUS CONSENT).**
- **GRANT OF SOFTWARE LICENSE.** This EULA grants you the following license:
  - You may use the SOFTWARE only on the DEVICE.
  - **NOT FAULT TOLERANT.** THE SOFTWARE IS NOT FAULT TOLERANT. FLIR Systems AB HAS INDEPENDENTLY DETERMINED HOW TO USE THE SOFTWARE IN THE DEVICE, AND MS HAS RELIED UPON FLIR Systems AB TO CONDUCT SUFFICIENT TESTING TO DETERMINE THAT THE SOFTWARE IS SUITABLE FOR SUCH USE.
  - **NO WARRANTIES FOR THE SOFTWARE.** THE SOFTWARE is provided “AS IS” and with all faults. THE ENTIRE RISK AS TO SATISFACTORY QUALITY, PERFORMANCE, ACCURACY, AND EFFORT (INCLUDING LACK OF NEGLIGENCE) IS WITH YOU. ALSO, THERE IS NO WARRANTY AGAINST INTERFERENCE WITH YOUR ENJOYMENT OF THE SOFTWARE OR AGAINST INFRINGEMENT. **IF YOU HAVE RECEIVED ANY WARRANTIES REGARDING THE DEVICE OR THE SOFTWARE, THOSE WARRANTIES DO NOT ORIGINATE FROM, AND ARE NOT BINDING ON, MS.**
  - No Liability for Certain Damages. **EXCEPT AS PROHIBITED BY LAW, MS SHALL HAVE NO LIABILITY FOR ANY INDIRECT, SPECIAL, CONSEQUENTIAL OR INCIDENTAL DAMAGES ARISING FROM OR IN CONNECTION WITH THE USE OR PERFORMANCE OF THE SOFTWARE. THIS LIMITATION SHALL APPLY EVEN IF ANY REMEDY FAILS OF ITS ESSENTIAL PURPOSE. IN NO EVENT SHALL MS BE LIABLE FOR ANY AMOUNT IN EXCESS OF U.S. TWO HUNDRED FIFTY DOLLARS (U.S.$250.00).**
  - **Limitations on Reverse Engineering, Decompilation, and Disassembly.** You may not reverse engineer, decompile, or disassemble the SOFTWARE, except and only to the extent that such activity is expressly permitted by applicable law notwithstanding this limitation.
  - **SOFTWARE TRANSFER ALLOWED BUT WITH RESTRICTIONS.** You may permanently transfer rights under this EULA only as part of a permanent sale or transfer of the Device, and only if the recipient agrees to this EULA. If the SOFTWARE is an upgrade, any transfer must also include all prior versions of the SOFTWARE.
  - **EXPORT RESTRICTIONS.** You acknowledge that SOFTWARE is subject to U.S. export jurisdiction. You agree to comply with all applicable international and national laws that apply to the SOFTWARE, including the U.S. Export Administration Regulations, as well as end-user, end-use and destination restrictions issued by U.S. and other governments. For additional information see http://www.microsoft.com/exporting/.

1.9 EULA Terms

Qt4 Core and Qt4 GUI, Copyright ©2013 Nokia Corporation and FLIR Systems AB. This Qt library is a free software; you can redistribute it and/or modify it under the terms of the GNU Lesser General Public License as published by the Free Software Foundation; either version 2.1 of the License, or (at your option) any later version. This library is distributed in the hope that it will be useful, but WITHOUT ANY WARRANTY; without even the implied warranty of MERCHANTABILITY or FITNESS FOR A PARTICULAR PURPOSE. See the GNU Lesser General Public License, http://www.gnu.org/licenses/lgpl-2.1.

html. The source code for the libraries Qt4 Core and Qt4 GUI may be requested from FLIR Systems AB.

2 Safety information

WARNING

Applicability: Class B digital devices.

This equipment has been tested and found to comply with the limits for a Class B digital device, pursuant to Part 15 of the FCC Rules. These limits are designed to provide reasonable protection against harmful interference in a residential installation. This equipment generates, uses and can radiate radio frequency energy and, if not installed and used in accordance with the instructions, may cause harmful interference to radio communications. However, there is no guarantee that interference will not occur in a particular installation. If this equipment does cause harmful interference to radio or television reception, which can be determined by turning the equipment off and on, the user is encouraged to try to correct the interference by one or more of the following measures:

- Reorient or relocate the receiving antenna.
- Increase the separation between the equipment and receiver.
- Connect the equipment into an outlet on a circuit different from that to which the receiver is connected.
- Consult the dealer or an experienced radio/TV technician for help.

WARNING

Applicability: Digital devices subject to 15.19/RSS-210.

NOTICE: This device complies with Part 15 of the FCC Rules and with RSS-210 of Industry Canada. Operation is subject to the following two conditions:

1. this device may not cause harmful interference, and
2. this device must accept any interference received, including interference that may cause undesired operation.

WARNING

Applicability: Digital devices subject to 15.21.

NOTICE: Changes or modifications made to this equipment not expressly approved by FLIR Systems may void the FCC authorization to operate this equipment.

WARNING

Applicability: Digital devices subject to 2.1091/2.1093/OET Bulletin 65.

Radiofrequency radiation exposure Information: The radiated output power of the device is below the FCC/IC radio frequency exposure limits. Nevertheless, the device shall be used in such a manner that the potential for human contact during normal operation is minimized.

WARNING

Applicability: Cameras with one or more laser pointers.

Do not look directly into the laser beam. The laser beam can cause eye irritation.

WARNING

Applicability: Cameras with one or more batteries.

Do not disassemble or do a modification to the battery. The battery contains safety and protection devices which, if damage occurs, can cause the battery to become hot, or cause an explosion or an ignition.

WARNING

Applicability: Cameras with one or more batteries.

If there is a leak from the battery and you get the fluid in your eyes, do not rub your eyes. Flush well with water and immediately get medical care. The battery fluid can cause injury to your eyes if you do not do this.

WARNING

Applicability: Cameras with one or more batteries.

Do not continue to charge the battery if it does not become charged in the specified charging time. If you continue to charge the battery, it can become hot and cause an explosion or ignition. Injury to persons can occur.

WARNING

Applicability: Cameras with one or more batteries.

Only use the correct equipment to remove the electrical power from the battery. If you do not use the correct equipment, you can decrease the performance or the life cycle of the battery. If you do not use the correct equipment, an incorrect flow of current to the battery can occur. This can cause the battery to become hot, or cause an explosion. Injury to persons can occur.

WARNING

Make sure that you read all applicable MSDS (Material Safety Data Sheets) and warning labels on containers before you use a liquid. The liquids can be dangerous. Injury to persons can occur.

CAUTION

Do not point the infrared camera (with or without the lens cover) at strong energy sources, for example, devices that cause laser radiation, or the sun. This can have an unwanted effect on the accuracy of the camera. It can also cause damage to the detector in the camera.

CAUTION

Do not use the camera in temperatures more than +50°C (+122°F), unless other information is specified in the user documentation or technical data. High temperatures can cause damage to the camera.

CAUTION

Applicability: Cameras with one or more laser pointers.

To prevent damage, put the protective cap on the laser pointer when you do not operate the laser pointer. Damage to the laser pointer can occur if you do not do this.

CAUTION

Applicability: Cameras with one or more batteries.

Do not attach the batteries directly to a car's cigarette lighter socket, unless FLIR Systems supplies a specific adapter to connect the batteries to a cigarette lighter socket. Damage to the batteries can occur.

CAUTION

Applicability: Cameras with one or more batteries.

Do not connect the positive terminal and the negative terminal of the battery to each other with a metal object (such as wire). Damage to the batteries can occur.

CAUTION

Applicability: Cameras with one or more batteries.

Do not get water or salt water on the battery, or permit the battery to become wet. Damage to the batteries can occur.

CAUTION

Applicability: Cameras with one or more batteries.

Do not make holes in the battery with objects. Damage to the battery can occur.

CAUTION

Applicability: Cameras with one or more batteries.

Do not hit the battery with a hammer. Damage to the battery can occur.

CAUTION

Applicability: Cameras with one or more batteries.

Do not put your foot on the battery, hit it or cause shocks to it. Damage to the battery can occur.

CAUTION

Applicability: Cameras with one or more batteries.

Do not put the batteries in or near a fire, or into direct sunlight. When the battery becomes hot, the built-in safety equipment becomes energized and can stop the battery charging procedure. If the battery becomes hot, damage can occur to the safety equipment and this can cause more heat, damage or ignition of the battery.

CAUTION

Applicability: Cameras with one or more batteries.

Do not put the battery on a fire or increase the temperature of the battery with heat. Damage to the battery and injury to persons can occur.

CAUTION

Applicability: Cameras with one or more batteries.

Do not put the battery on or near fires, stoves, or other high-temperature locations. Damage to the battery and injury to persons can occur.

CAUTION

Applicability: Cameras with one or more batteries.

Do not solder directly onto the battery. Damage to the battery can occur.

CAUTION

Applicability: Cameras with one or more batteries.

Do not use the battery if, when you use, charge, or put the battery in storage, there is an unusual smell from the battery, the battery feels hot, changes color, changes shape, or is in an unusual condition. Speak with your sales office if one or more of these problems occurs. Damage to the battery and injury to persons can occur.

CAUTION

Applicability: Cameras with one or more batteries.

Only use a specified battery charger when you charge the battery. Damage to the battery can occur if you do not do this.

CAUTION

Applicability: Cameras with one or more batteries.

Only use a specified battery for the camera. Damage to the camera and the battery can occur if you do not do this.

CAUTION

Applicability: Cameras with one or more batteries.

The temperature range through which you can charge the battery is ±0°C to +45°C (+32°F to +113°F), unless other information is specified in the user documentation or technical data. If you charge the battery at temperatures out of this range, it can cause the battery to become hot or to break. It can also decrease the performance or the life cycle of the battery.

CAUTION

Applicability: Cameras with one or more batteries.

The temperature range through which you can remove the electrical power from the battery is -15°C to +50°C (+5°F to +122°F), unless other information is specified in the user documentation or technical data. If you operate the battery out of this temperature range, it can decrease the performance or the life cycle of the battery.

CAUTION

Applicability: Cameras with one or more batteries.

When the battery is worn, apply insulation to the terminals with adhesive tape or equivalent materials before you discard it. Damage to the battery and injury to persons can occur if you do not do this.

CAUTION

Applicability: Cameras with one or more batteries.

Remove any water or moisture on the battery before you install it. Damage to the battery can occur if you do not do this.

CAUTION

Do not apply solvents or equivalent liquids to the camera, the cables, or other items. Damage to the battery and injury to persons can occur.

CAUTION

Be careful when you clean the infrared lens. The lens has an anti-reflective coating which is easily damaged. Damage to the infrared lens can occur.

CAUTION

Do not use too much force to clean the infrared lens. This can cause damage to the anti-reflective coating.

Note The encapsulation rating is only applicable when all the openings on the camera are sealed with their correct covers, hatches, or caps. This includes the compartments for data storage, batteries, and connectors.

3 Notice to user

3.1 User-to-user forums

Exchange ideas, problems, and infrared solutions with fellow thermographers around the world in our user-to-user forums. To go to the forums, visit:

http://www.infraredtraining.com/community/boards/

3.2 Calibration

We recommend that you send in the camera for calibration once a year. Contact your local sales office for instructions on where to send the camera.

3.3 Accuracy

For very accurate results, we recommend that you wait 5 minutes after you have started the camera before measuring a temperature.

3.4 Disposal of electronic waste

As with most electronic products, this equipment must be disposed of in an environmentally friendly way, and in accordance with existing regulations for electronic waste.

Please contact your FLIR Systems representative for more details.

3.5 Training

To read about infrared training, visit:

- http://www.infraredtraining.com
- http://www.irtraining.com
- http://www.irtraining.eu

3.6 Documentation updates

Our manuals are updated several times per year, and we also issue product-critical notifications of changes on a regular basis.

To access the latest manuals, translations of manuals, and notifications, go to the Download tab at:

http://support.flir.com

It only takes a few minutes to register online. In the download area you will also find the latest releases of manuals for our other products, as well as manuals for our historical and obsolete products.

3.7 Important note about this manual

FLIR Systems issues generic manuals that cover several cameras within a model line.

This means that this manual may contain descriptions and explanations that do not apply to your particular camera model.

3.8 Note about authoritative versions

The authoritative version of this publication is English. In the event of divergences due to translation errors, the English text has precedence.

Any late changes are first implemented in English.

4 Customer help

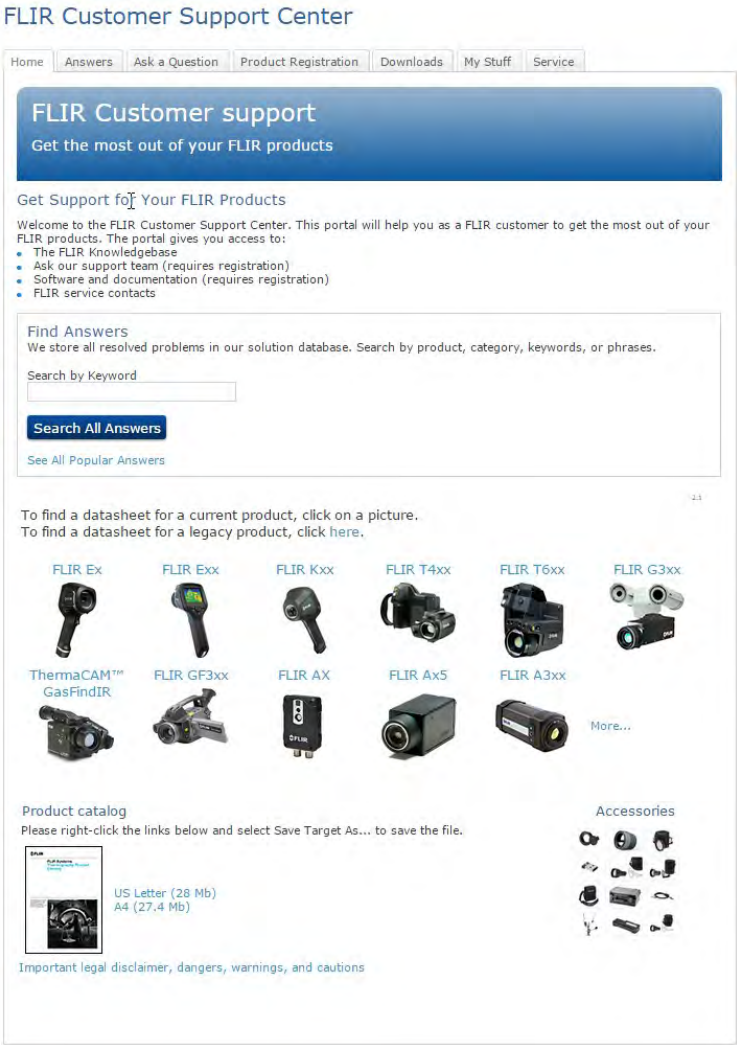

4.1 General

For customer help, visit:

http://support.flir.com

4.2 Submitting a question

To submit a question to the customer help team, you must be a registered user. It only takes a few minutes to register online. If you only want to search the knowledgebase for existing questions and answers, you do not need to be a registered user.

When you want to submit a question, make sure that you have the following information to hand:

- The camera model
- The camera serial number
- The communication protocol, or method, between the camera and your device (for example, HDMI, Ethernet, USB, or FireWire)
- Device type (PC/Mac/iPhone/iPad/Android device, etc.)
- Version of any programs from FLIR Systems
- Full name, publication number, and revision number of the manual

4.3 Downloads

On the customer help site you can also download the following, when applicable for the product:

- Firmware updates for your infrared camera.
- Program updates for your PC/Mac software.
- Freeware and evaluation versions of PC/Mac software.
- User documentation for current, obsolete, and historical products.
- Mechanical drawings (in *.dxf and *.pdf format).
- Cad data models (in *.stp format).
- Application stories.
- Technical datasheets.
- Product catalogs.

5 Quick Start Guide

5.1 Procedure

Follow this procedure:

1. Put a battery into the battery compartment.
2. Charge the battery for 4 hours before starting the camera for the first time, or until the green battery condition LED glows continuously.
3. Insert a memory card into the card slot.
4. Push to turn on the camera.
5. Aim the camera toward the object of interest.
6. Adjust the focus by rotating the focus ring.

   Note It is very important to adjust the focus correctly. Incorrect focus adjustment affects how the image modes *Thermal MSX*, *Thermal*, and *Picture-in-picture* work. It also affects the temperature measurement.

7. Push the Save button (the trigger) to save an image.
8. Install FLIR Tools on your computer.
9. Start FLIR Tools.
10. Connect the camera to the computer using the USB cable.
11. Import the images into FLIR Tools and create a PDF report.

6 List of accessories and services

Product name	Part number
Battery charger, incl. power supply with multi plugs (Exx, Kxx)	T198125
Bluetooth Headset	T197771ACC
Calibration including General maintenance Exx	T199839
Cardboard box with printing 280 x 200 x 120 mm	T127477
Cigarette lighter adapter kit, 12 VDC, 1.2 m/3.9 ft.	T198509
FLIR Reporter Professional (license only)	T198586
FLIR ResearchIR Max + HSDR 4 (hardware sec. dev.)	T198697
FLIR ResearchIR Max + HSDR 4 (printed license key)	T199014
FLIR ResearchIR Max + HSDR 4 Upgrade (printed license key)	T199044
FLIR ResearchIR Max 4 (hardware sec. dev.)	T198696
FLIR ResearchIR Max 4 (printed license key)	T199013
FLIR ResearchIR Max 4 Upgrade (printed license key)	T199043
FLIR ResearchIR Standard 4 (hardware sec. dev.)	T198731
FLIR ResearchIR Standard 4 (printed license key)	T199012
FLIR ResearchIR Standard 4 Upgrade (printed license key)	T199042
FLIR Tools	T198584
FLIR Tools+ (download card incl. license key)	T198583
High-temperature lens	T199235
IR lens, 76 mm (6°) with case and mounting support for Exx	T198113
IR lens, f = 10 mm, 45° incl. case	1196960
IR lens, f = 30 mm, 15° incl. case	1196961
IR Window 2 in	19250-100
IR Window 3 in.	19251-100
IR Window 4 in.	19252-100
Li-Ion Battery pack 3.7V 17Wh	T198487
Memory card SDHC 4 GB	T911230ACC
One year extended warranty for Exx series	T199837
Pouch for FLIR Exx series	T198484
Power supply, incl. multi plugs	T910814
SS IR Window 2 in.	19250-200
SS IR Window 3 in.	19251-200
SS IR Window 4 in.	19252-200
Sun shield	T198485
Tool belt	T911093
Transport case Exx	T198341ACC
Tripod Adapter	T198486
USB cable Std A <-> Mini-B	1910423
Video cable	1910582ACC

Note FLIR Systems reserves the right to discontinue models, parts or accessories, and other items, or to change specifications at any time without prior notice.

7 Camera parts

7.1 View from the right

7.1.1 Figure

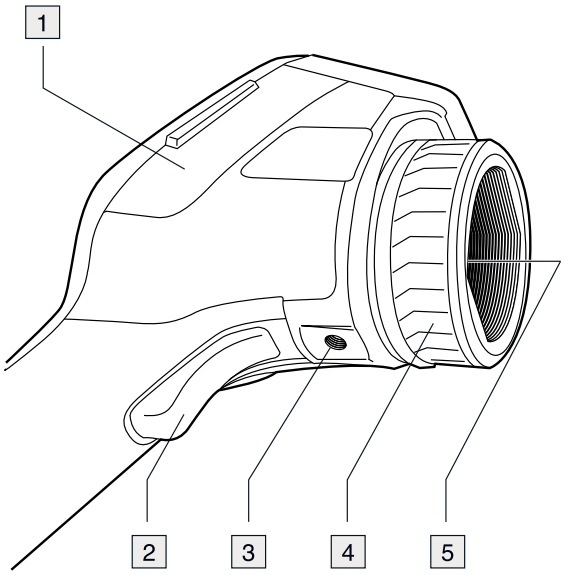

7.1.2 Explanation

1. Cover for the right-hand compartment:
   - USB-A connector.
   - USB mini-B connector.
   - Power connector.
2. Save button.
3. Tripod mount. Requires an adapter (extra accessory).
4. Focus ring.
5. Infrared lens.

7.2 View from the left

7.2.1 Figure

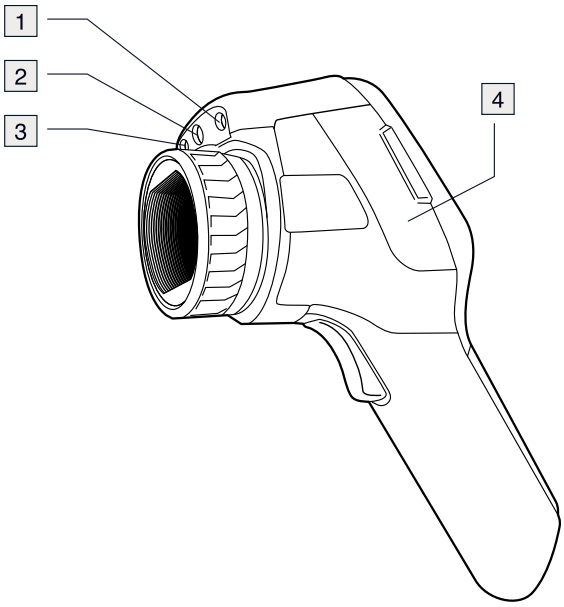

7.2.2 Explanation

1. Laser pointer.
2. Lamp for the digital camera.
3. Digital camera.
4. Cover for the left-hand compartment:
   - Video out connector (composite video).
   - Memory card slot.

7.3 LCD and keypad

7.3.1 Figure

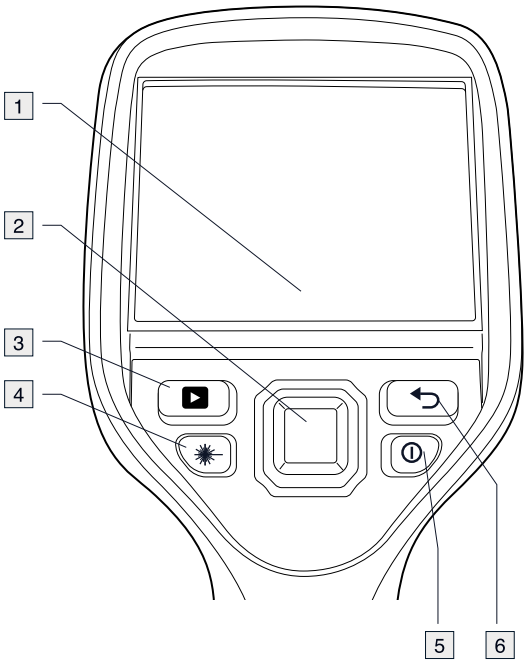

7.3.2 Explanation

1. Touch-screen LCD.
2. Navigation pad with center push.
3. Image archive button.
4. Button to operate the laser pointer.
5. On/off button.
   Function:
   - Push the button to turn on the camera.
   - Push and hold the button for less than 5 seconds to put the camera in stand-by mode. The camera then automatically turns off after 6 hours.
   - Push and hold the button for more than 10 seconds to turn off the camera.
6. Back button.

7.4 View from the bottom

7.4.1 Figure

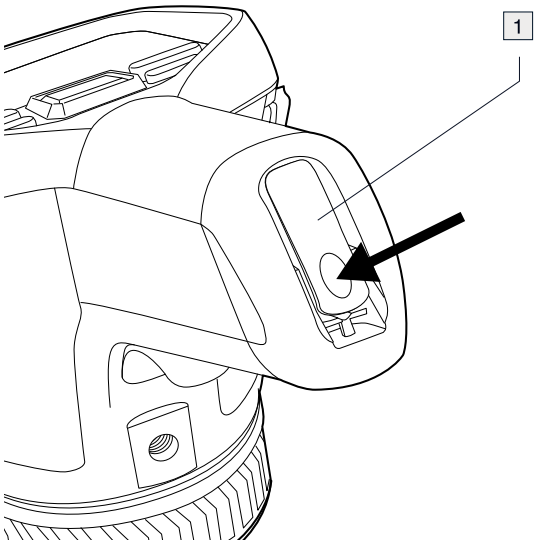

7.4.2 Explanation

1. Latch to open the cover for the battery compartment. Push to open.

7.5 Battery condition LED indicator

7.5.1 Figure

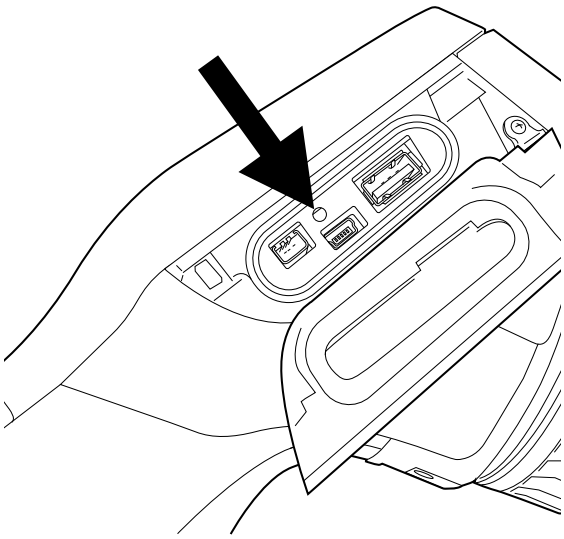

7.5.2 Explanation

Type of signal	Explanation
The green LED flashes two times per second.	The battery is being charged.
The green LED glows continuously.	The battery is fully charged.

7.6 Laser pointer

7.6.1 Figure

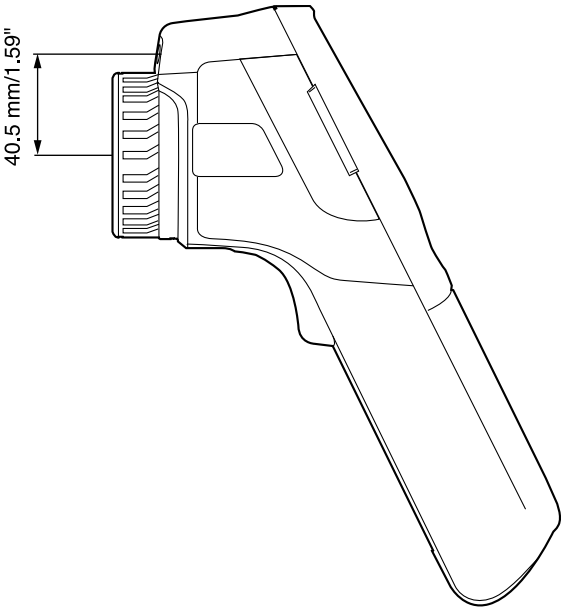

Figure 7.1 This figure shows the difference in position between the laser pointer and the optical center of the infrared lens.

⚠ **WARNING**
Do not look directly into the laser beam. The laser beam can cause eye irritation.

⚠ **CAUTION**
Protect the laser pointer with the protective cap when you are not using the laser pointer.

Note The symbol is displayed on the screen when the laser pointer is on.

Note The laser pointer may not be enabled in all markets.

7.6.2 Laser warning label

A laser warning label with the following information is attached to the camera:

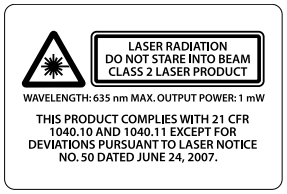

7.6.3 Laser rules and regulations

Wavelength: 635 nm. Maximum output power: 1 mW.

This product complies with 21 CFR 1040.10 and 1040.11 except for deviations pursuant to Laser Notice No. 50, dated June 24, 2007.

8 Screen elements

8.1 Figure

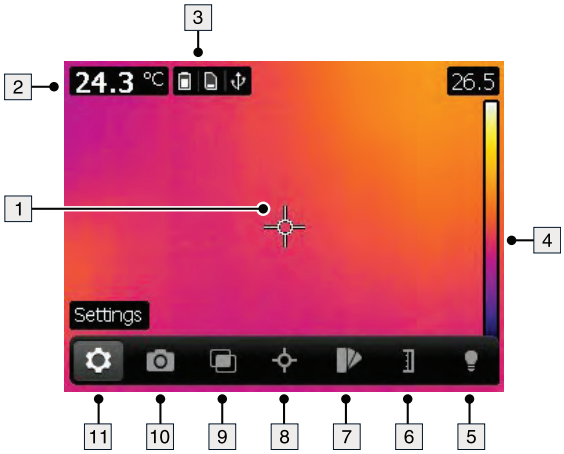

8.2 Explanation

1. Measurement tools (e.g., spotmeter).
2. Measurement result table.
3. Status icons and notifications.
4. Temperature scale.
5. Lamp toolbar button.
6. Temperature scale toolbar button.
7. Color toolbar button.
8. Measurement toolbar button.
9. Image modes toolbar button.
10. Recording mode toolbar button.
11. Settings toolbar button.

Note To display the menu system, tap the screen or push the navigation pad.

9 Navigating the menu system

9.1 Figure

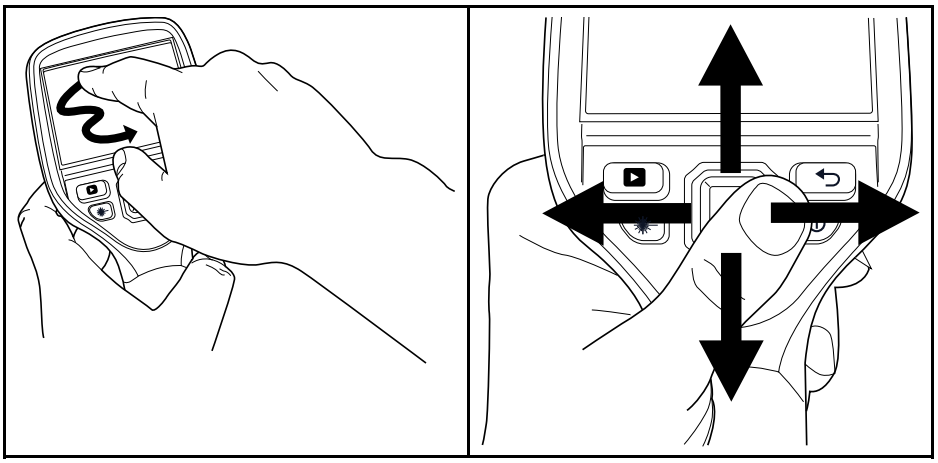

9.2 Explanation

The figure above shows the two ways to navigate the menu system in the camera:

- Using the touch screen LCD to navigate the menu system (left).
- Using the navigation pad to navigate the menu system (right).

10 Connecting external devices and storage media

10.1 Figure

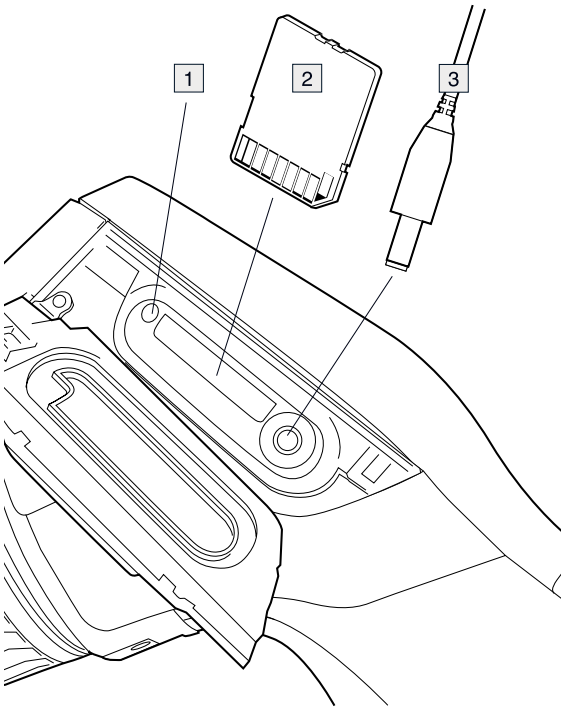

10.2 Explanation

1. Indicator showing that the memory card is busy.

   Note Do not eject the SD memory card when this LED is flashing.

2. Memory card (SD card)
3. Video cable.

10.3 Figure

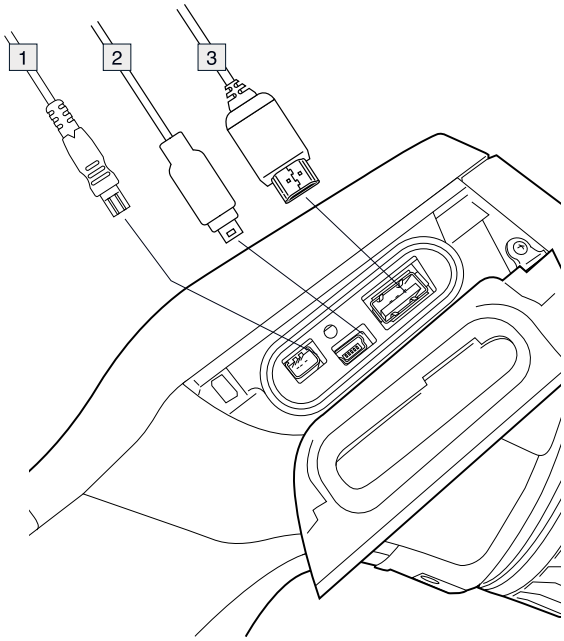

10.4 Explanation

1. Power cable.
2. USB mini-B cable (to connect the camera to a PC).
3. USB-A cable (to connect the camera to an external device, e.g., a USB memory stick).

11 Pairing Bluetooth devices

11.1 General

You can use Bluetooth-enabled headsets and FLIR meters together with the camera. Before you can use the device with the camera, you need to pair the camera and the device.

11.2 Procedure

Follow this procedure:

1. Enable Bluetooth on the device. See the user documentation for that device for information on how to do this.
2. On the camera, push the navigation pad to display the menu system.
3. Use the navigation pad to go to *Settings*.
4. Push the navigation pad.
5. Select *Device settings* and push the navigation pad.
6. Select *Bluetooth including METERLiNK* and push the navigation pad.
7. Enable *Bluetooth* by pushing the navigation pad.
8. Select *Scan for Bluetooth devices* and push the navigation pad right.
9. When the device is displayed in the list of devices, select it and push the navigation pad to pair the camera and the device.

Note

- Only METERLiNK devices and Bluetooth-enabled headsets will appear in the list of available devices.
- You can add several devices.
- You can remove a device by selecting the device and then selecting *Unpair device*.
- After adding a METERLiNK device, such as the FLIR MR77 or FLIR CM78, the result from the meter will be visible in the measurement result table.
- After adding a Bluetooth-enabled headset, it is ready to be used for adding voice annotations.

12 Configuring Wi-Fi

12.1 General

You can connect the camera in two different ways:

- *Most common use*: Setting up a peer-to-peer connection (also called an *ad hoc* or *P2P* connection). This method is primarily used with other devices, e.g., an iPhone or iPad.
- *Less common use*: Connecting the camera to a wireless local area network (WLAN).

12.2 Setting up a peer-to-peer connection (most common use)

Follow this procedure:

1. On the camera, push the navigation pad to display the menu system.
2. Use the navigation pad to go to *Settings*.
3. Push the navigation pad.
4. Select *Device settings* and push the navigation pad.
5. Select *Wi-Fi* and push the navigation pad.
6. Select *Share* and push the navigation pad.
7. (Optional step.) To display and change the parameters, select *Settings* and push the navigation pad.
   - If the transfer rate is low, this can be due to a crowded frequency band. Try changing the channel to increase the transfer rate. To change the channel (the channel that the camera is broadcasting on), select *Channel* and push the navigation pad.
   - To activate WEP (encryption algorithm), select *WEP* and push the navigation pad. This will check the *WEP* check box.
   - To change the WEP password, select *Password* and push the navigation pad.

   Note These parameters are set for your camera's network. They will be used by the external device to connect that device to the network.

12.3 Connecting the camera to a wireless local area network (less common use)

Follow this procedure:

1. On the camera, push the navigation pad to display the menu system.
2. Use the navigation pad to go to *Settings* .
3. Push the navigation pad.
4. Select *Device settings* and push the navigation pad.
5. Select *Wi-Fi* and push the navigation pad.
6. Select *Connect to network* and push the navigation pad.
7. Select *Networks* and push the navigation pad right.
8. Select a network by pushing the navigation pad. You typically need to enter a password to access the network.

Note Some networks do not broadcast their existence. To connect to such a network, select *Settings* from the *Networks* list and push the navigation pad. Then select *Add network...* and set all parameters manually for that network.

13 Handling the camera

13.1 Charging the battery

Note You must charge the battery for 4 hours before you start using the camera for the first time.

13.1.1 Using the power supply to charge the battery

13.1.1.1 Procedure

Follow this procedure:

1. Connect the power supply cable plug to the power connector on the camera.
2. Connect the power supply mains-electricity plug to a mains socket.
3. Disconnect the power supply cable plug when the battery condition LED indicator is a continuous green.

13.1.2 Using the stand-alone battery charger to charge the battery

13.1.2.1 Explanation

Type of signal	Explanation
The blue LED flashes.	The battery is being charged.
The blue LED glows continuously.	The battery is fully charged.

13.1.2.2 Procedure

Follow this procedure:

1. Put the battery in the battery charger.
2. Connect the power supply cable plug to the connector on the battery charger.
3. Connect the power supply mains-electricity plug to a mains socket.
4. Disconnect the power supply cable plug when the blue LED on the battery charger is continuous.

13.2 Turning on and turning off the camera

- Push the button to turn on the camera.
- Push and hold the button for less than 5 seconds to put the camera in standby mode. The camera then automatically turns off after 6 hours.
- Push and hold the button for more than 10 seconds to turn off the camera.

13.3 Adjusting the infrared camera focus

13.3.1 Figure

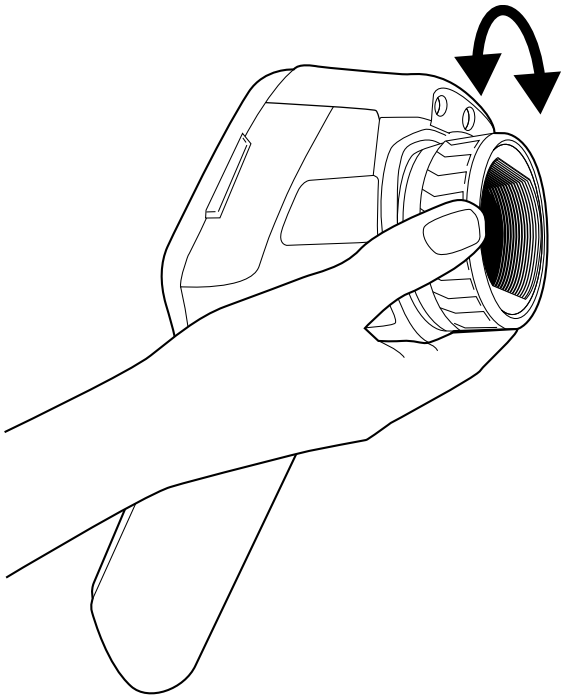

13.3.2 Procedure

Follow this procedure:

1. Do one of the following:
   - For far focus, rotate the focus ring clockwise (with the touch-screen LCD facing toward you).
   - For near focus, rotate the focus ring counter-clockwise (with the touch-screen LCD facing toward you).

Note Do not touch the lens surface when you adjust the infrared camera focus manually. If this happens, clean the lens according to the instructions in 26.2 *Infrared lens*, page 132.

Note It is very important to adjust the focus correctly. Incorrect focus adjustment affects how the image modes *Thermal MSX*, *Thermal*, and *Picture-in-picture* work. It also affects the temperature measurement.

13.4 Operating the laser pointer

13.4.1 Figure

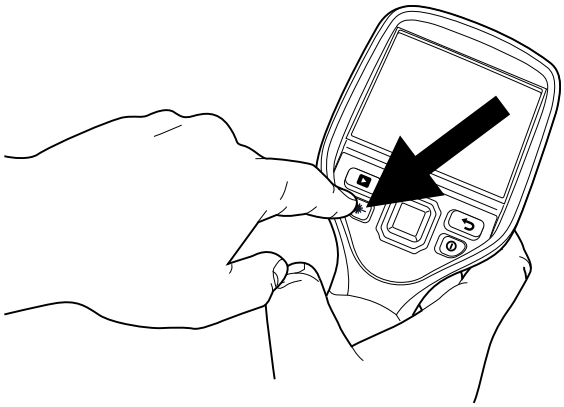

13.4.2 Procedure

Follow this procedure:

1. To turn on the laser pointer, push and hold the laser button.
2. To turn off the laser pointer, release the laser button.

Note

- A warning indicator is displayed on the screen when the laser pointer is turned on.
- The position of the laser dot is indicated on the infrared image (depending on the camera model).

13.5 Removing the battery

Follow this procedure:

1. Push the latch on the battery compartment.

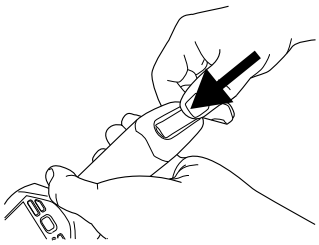

2. Open the battery cover.

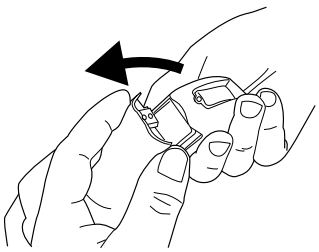

3. Pull the transparent tape to lift out the battery.

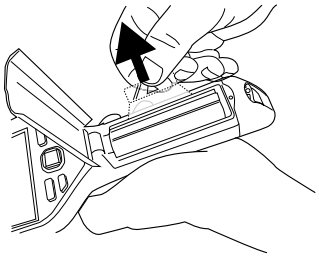

13.6 Mounting an accessory lens

Follow this procedure:

1. Note the two indents on the front of the lens and the corresponding tabs on the lens cap.

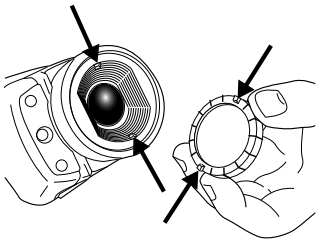

2. Use the lens cap from the accessory lens as a tool to remove the plastic front of the lens. Rotate the plastic front 30° degrees counter-clockwise.

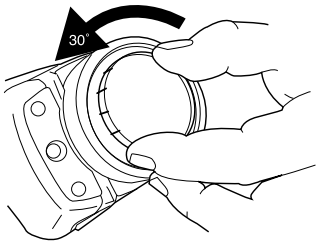

3. Note the index marks on the lens bayonet mount and on the replacement lens.

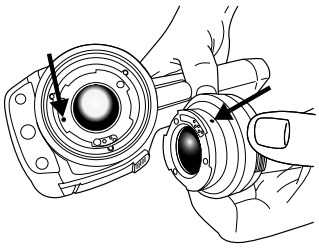

4. Carefully push the lens into position.

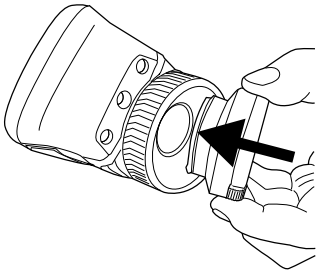

5. Rotate the lens 30° clockwise.

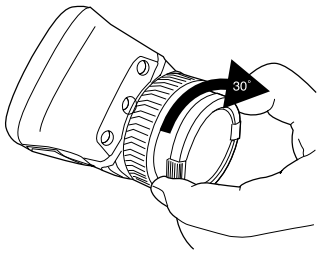

6. Turn on the camera.
7. Specify the lens under *Settings* > *Add-on lens*.

13.7 Calibrating the touchscreen

13.7.1 Figure

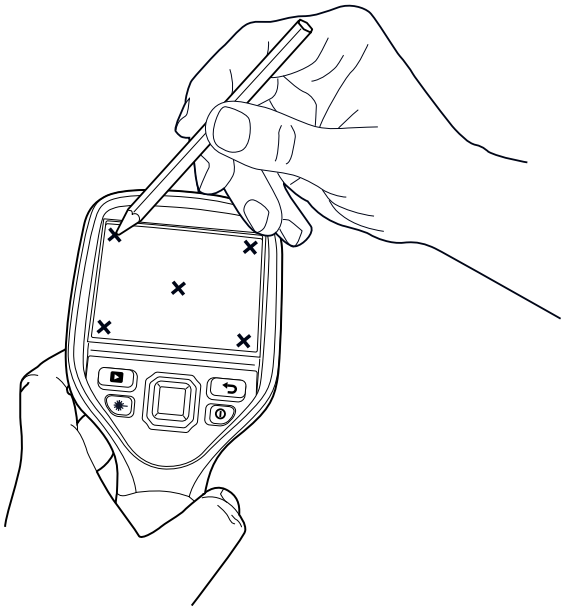

13.7.2 Procedure

Follow this procedure:

1. Push the navigation pad to display the menu system.
2. Use the navigation pad to go to *Settings*.
3. Push the navigation pad.
4. Select *Device settings* and push the navigation pad.
5. Select *Setup camera* and push the navigation pad.
6. Select *Calibrate touchscreen* and push the navigation pad.
7. Follow the on-screen instructions.

13.8 Using the camera lamp

13.8.1 General

The camera lamp can be used as a flash for the digital camera. When the flash function is activated, the camera lamp will flash when an image is saved by pushing the Save button.

The camera lamp can also be used as a flashlight.

13.8.2 Procedure

Follow this procedure:

1. Push the navigation pad to display the menu system.
2. Use the navigation pad to go to *Lamp*.
3. Push the navigation pad.
4. Do one of the following:
   - To enable the flash function, select *Flash* and push the navigation pad.
   - To turn on the camera lamp, select *On* and push the navigation pad.
   - To disable the flash function and to turn off the camera lamp, select *Off* and push the navigation pad.

14 Working with images

14.1 Saving an image

14.1.1 General

You can save images to a memory card.

The camera saves an image file including all thermal and visual information. This means that you can open an image file at a later time and, for example, select another image mode, apply color alarms, and add measurement tools.

14.1.2 Image capacity

This table gives information on the *approximate* number of infrared (IR) and digital camera (DC) images that can be saved on memory cards:

Card size	IR only	IR + DC	IR + DC + 30 seconds voice annotation
1 GB	5500	850	600
2 GB	11 000	1700	1200

14.1.3 Naming convention

The naming convention for images is *FLIRxxxx.jpg*, where *xxxx* is a unique counter.

14.1.4 Procedure

Follow this procedure:

1. To save an image, push the Save button.

Note

- Depending on the settings in the *Settings* > *Save options* dialog box, the following may happen:
  - A preview image is displayed before the image is saved.
  - An annotation tool or the annotation menu is displayed when the image has been saved.

14.2 Previewing an image

14.2.1 General

You can preview an image before you save it. This enables you to see if the image contains the information you want before you save it. You can also adjust and edit the image.

Note The camera must be configured to display a preview image before saving. Select *Settings*> *Save options* > *Preview image before saving* = *On*.

14.2.2 Procedure

Follow this procedure:

1. To preview an image, push the Save button. This displays the preview.
2. Manual image adjust mode is now active, and the status icon is displayed. For image adjustment instructions, see 14.5 *Adjusting an infrared image*, page 32.
3. To edit the image, push the navigation pad. This displays a toolbar. For editing instructions, see 14.4 *Editing a saved image*, page 32.
4. Do one of the following:
   - To save the image, push the Save button.
   - To exit preview mode without saving, push the Back button . A dialog box appears, asking you to cancel or save any changes.

14.3 Opening a saved image

14.3.1 General

When you save an image, the image is stored on a memory card. To display the image again, open it from the memory card.

14.3.2 Procedure

Follow this procedure:

1. Push to open the image archive.
2. Push the navigation pad up/down or left/right to select the image you want to view.
3. Push the navigation pad to open the image.
4. Do one or more of the following:
   - To switch between an infrared image and a visual image, push the navigation pad up/down.
   - To view the previous/next image, push the navigation pad left/right.
   - To edit the image, add annotations, display information, or delete the image, push the navigation pad. This displays a toolbar.
   - To return to the image archive overview, push the Back button .
5. Push the Back button to leave the image archive.

14.4 Editing a saved image

14.4.1 General

You can edit a saved image. You can also edit an image in preview mode.

14.4.2 Procedure

Follow this procedure:

1. Open the image in the image archive.
2. Push the navigation pad and select *Edit* from the toolbar.
3. Manual image adjust mode is now active, and the status icon is displayed. For image adjustment instructions, see 14.5 *Adjusting an infrared image*, page 32.
4. Push the navigation pad. This displays a toolbar.
   - Select *Cancel* to exit edit mode.
   - Select *Measurement parameters* to change the global parameters.
   - Select *Image mode* to change the image mode.
   - Select *Measurement* to add a measurement tool.
   - Select *Color* to change the color palette or set a color alarm.
   - Select *Temperature scale* to adjust the image.
   - Select *Save* to save and exit edit mode.

14.5 Adjusting an infrared image

14.5.1 General

An infrared image can be adjusted automatically or manually. When manual image adjust mode is active, the status icon is displayed.

- In live mode, select *Temperature scale* from the menu system to switch between automatic and manual image adjust modes.
- In live mode, you can also select manual image adjust mode by touching the minimum or maximum temperature scale level on the screen.
- In preview/edit mode, manual image adjust mode is active.

There are two different manual image adjust modes. Select the type of mode under *Settings* > *Device settings* > *Set up camera* > *Level span mode*.

- *Level / span*: This mode allows you to manually adjust the level and span of the temperature scale.
- *Level / max / min*: In this mode, you can manually adjust the temperature scale minimum and maximum limits, simultaneously or individually.

14.5.2 Example 1

Here are two infrared images of a building. In the left image, which is auto-adjusted, the large temperature span between the clear sky and the heated building makes a correct analysis difficult. You can analyze the building in more detail if you change the temperature scale to values close to the temperature of the building.

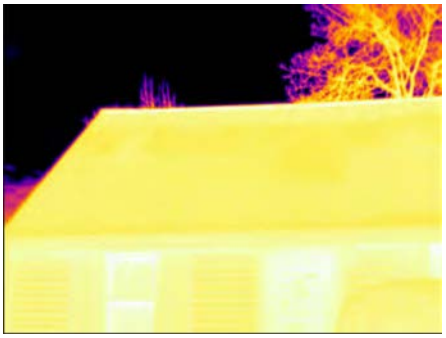

Automatic

Manual

14.5.3 Example 2

Here are two infrared images of an isolator in a power line. To make it easier to analyze the temperature variations in the isolator, the temperature in the right image has been changed to values close to the temperature of the isolator.

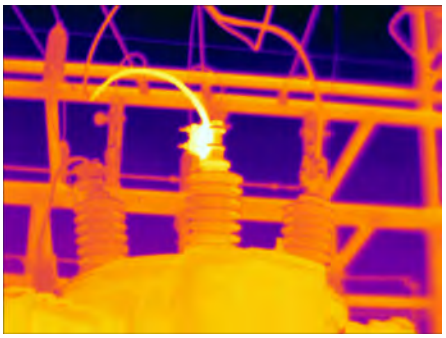

Automatic

Manual

14.5.4 Manual adjustment in Level / span mode

Note This procedure assumes that you have configured the camera to do manual image adjustments in *Level / span* mode. Select *Settings* > *Device settings* > *Set up camera* > *Level span mode* = *Level / span*.

Follow this procedure:

1. Push the navigation pad to display the menu system.
2. Use the navigation pad to go to *Temperature scale*.
3. Push the navigation pad.
4. Select *Manual* and push the navigation pad.
5. Push the navigation pad up/down to increase/decrease the level.
6. Push the navigation pad right/left to increase/decrease the span.

14.5.5 Manual adjustment in Level / max / min mode

Note This procedure assumes that you have configured the camera to do manual image adjustments in *Level / max / min* mode. Select *Settings* > *Device settings* > *Set up camera* > *Level span mode* = *Level / max / min*.

Follow this procedure:

1. Push the navigation pad to display the menu system.
2. Use the navigation pad to go to *Temperature scale*.
3. Push the navigation pad.
4. Select *Manual* and push the navigation pad.
5. To simultaneously change the temperature scale minimum and maximum limits, push the navigation pad up/down.
6. To change the minimum limit or the maximum limit, do the following:
   - Push the navigation pad left/right to select (highlight) the maximum or minimum temperature.
   - Push the navigation pad up/down to change the value of the highlighted temperature.

14.6 Performing a non-uniformity correction (NUC)

14.6.1 What is a non-uniformity correction?

A non-uniformity correction is *an image correction carried out by the camera software to compensate for different sensitivities of detector elements and other optical and geometrical disturbances*[1].

14.6.2 When to perform a non-uniformity correction?

The non-uniformity correction process should be carried out whenever the output image becomes spatially noisy. The output can become spatially noisy when the ambient temperature changes (such as from day to night operation, and vice versa).

14.6.3 Procedure

To perform a non-uniformity correction, push and hold the Image archive button for more than 2 seconds.

14.7 Changing the temperature range

14.7.1 General

You must change the temperature range according to the expected temperature of the object you are inspecting.

14.7.2 Procedure

Follow this procedure:

1. Push the navigation pad to display the menu system.
2. Use the navigation pad to go to *Settings*.
3. Push the navigation pad.
4. Select *Device settings* and push the navigation pad.
5. Select *Set up camera* and push the navigation pad.
6. Select *Camera temperature range* and push the navigation pad.
7. Select the appropriate temperature range and push the navigation pad.

1. Definition from the impending international adoption of DIN 54190-3 (Non-destructive testing – Thermographic testing – Part 3: Terms and definitions).

14.8 Changing the color palette

14.8.1 General

You can change the color palette that the camera uses to display different temperatures. A different palette can make it easier to analyze an image.

14.8.2 Procedure

Follow this procedure:

1. Push the navigation pad to display the menu system.
2. Use the navigation pad to go to *Color*.
3. Push the navigation pad.
4. Use the navigation pad to select a different color palette.
5. Push the navigation pad to confirm the choice.

Note Some color options hold specific meanings, such as acting as isotherms or alarms. For more information, see section 17 *Working with alarms*, page 42.

14.9 Zooming in on an image

14.9.1 General

You can zoom in on an image using the camera's digital zoom function. You can do this on both live images and saved images.

14.9.2 Procedure

Follow this procedure:

1. To zoom in on an image, tap and hold your finger down on the screen. This displays a zoom toolbar.

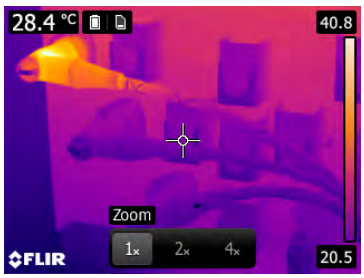

2. On the zoom toolbar, tap a zoom factor.
   Once the zoom factor has been selected, it is displayed in the notification area at the top of the screen.

14.10 Deleting an image

14.10.1 Procedure

Follow this procedure:

1. Push to open the image archive.
2. Push the navigation pad up/down or left/right to select the image you want to view.
3. Push the navigation pad to open the image.
4. Push the navigation pad to display a toolbar
5. On the toolbar, select *Delete* and push the navigation pad.
6. Push to leave the image archive.

14.11 Deleting all images

14.11.1 Procedure

Follow this procedure:

1. Push the navigation pad to display the menu system.
2. Use the navigation pad to go to *Settings*.
3. Push the navigation pad.
4. Select *Device settings* and push the navigation pad.
5. Select *Reset options* and push the navigation pad.
6. Select *Delete all saved images* and push the navigation pad.

15 Working with image modes

15.1 General

You can choose between different image modes when capturing an image.

15.2 Types of image modes

These are the image modes you can choose from:

Thermal MSX (Multi Spectral Dynamic Imaging): Using this mode, the camera captures infrared images where the edges of the objects are enhanced. Note that the label for each fuse is clearly legible.	
Thermal: Using this mode, the camera captures an ordinary infrared image.	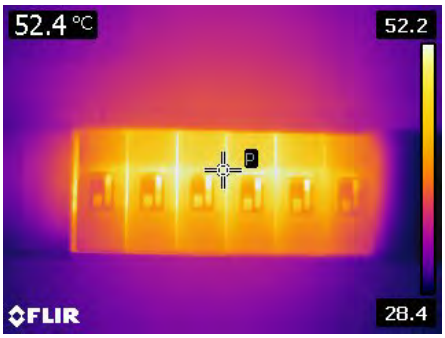
Picture-in-picture: Using this mode, the camera captures an infrared image frame that is displayed on top of a digital photo.	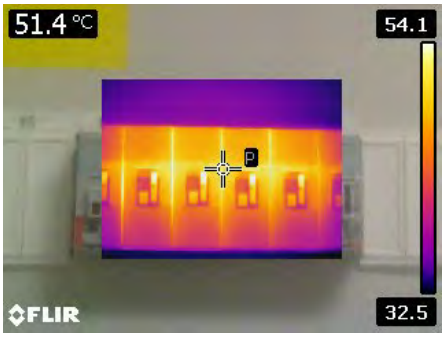
Digital camera: Using this mode, the camera captures an ordinary digital photo.	

15.3 Procedure

Follow this procedure:

1. Push the navigation pad to display the menu system.
2. Use the navigation pad to go to *Image modes*.
3. Push the navigation pad.
4. Select one of the following image modes:
   - *Thermal MSX*.
   - *Thermal*.
   - *Picture-in-picture*.
   - *Digital camera*.

Note The data for all image modes are saved when saving an image. Therefore, if you open an image in, e.g., FLIR Tools or in the image archive you can still change the image mode.

16 Working with measurement tools

16.1 Laying out measurement tools in live mode

16.1.1 General

To measure a temperature, you use one or more measurement tools, e.g., a spotmeter or a box. The camera is equipped with a number of *preset* measurement tools.

16.1.2 Procedure

Follow this procedure:

1. Push the navigation pad to display the menu system.
2. Use the navigation pad to go to *Measurement*.
3. Push the navigation pad. This displays a measurement toolbar.

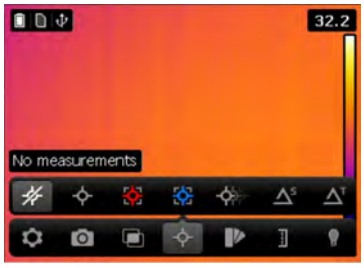

4. On the toolbar, select one of the following and push the navigation pad:
   - *No measurements*: Clears all measurement tools from the screen.
   - *Center spot*: A centered spotmeter on the screen.
   - *Hot spot*: A moving spotmeter indicating the hottest temperature within a box.
   - *Cold spot*: A moving spotmeter indicating the coldest temperature within a box.
   - *3 spots*: Three spots vertically centered.
   - *Hot spot - Spot*: The temperature difference between the hot spotmeter and the spotmeter.
   - *Hot spot - Temp*: The temperature difference between the hot spotmeter and a set temperature.

16.2 Laying out measurement tools in edit mode

16.2.1 General

You lay out measurement tools in recall mode by opening an image in the image archive.

16.2.2 Procedure

Follow this procedure:

1. Push ▶ to open the image archive.
2. Push the navigation pad up/down or left/right to select the image you want to view.
3. Push the navigation pad to open the image.
4. Push the navigation pad to display a toolbar.
5. On the toolbar, select *Edit* and push the navigation pad. This opens the image in edit mode.
6. Push the navigation pad to display a toolbar.
7. On the toolbar, select *Measurement*. This displays a toolbar.
8. On the toolbar, select one of the following and push the navigation pad:
   - *Add spot*: Adds a spotmeter.
   - *Add box*: Adds a box.
   - *Add delta*: Adds a difference calculation for two measurement tools.
9. Push the Back button to leave edit mode. A dialog box appears, asking you to cancel or save any changes.

16.3 Moving and resizing measurement tools

16.3.1 General

You can move and resize measurement tools in various ways.

16.3.2 Procedure

Note

- This procedure assumes that you have previously laid out a measurement tool on the screen.
- You can also move and resize the measurement tool by touching the screen.

Follow this procedure:

1. To select the measurement tool, touch the tool on the screen. The tool is now displayed with one or more handles.

   Spot measurement tool:

   Area measurement tool: 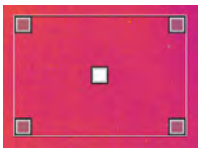
2. Push the navigation pad. This displays a toolbar.
   - Select *Resize* to change the size of the tool.
   - Select *Move* to move the tool.
   - Select *Center* to move the tool to the center of the screen.
3. Push the navigation pad up/down and left/right to resize or move the tool.
4. When completed, push the navigation pad and select *Done*.

16.4 Displaying maximum, minimum, and average values

16.4.1 General

For the box tools, including the hot spot and the cold spot tools, you can set the camera to display the maximum, minimum, and average values. You can also display markers indicating the maximum and minimum values in the box.

16.4.2 Procedure

Follow this procedure:

1. To select the measurement tool, touch the tool on the screen. The tool is now displayed with one or more handles.
2. Push the navigation pad. This displays a toolbar.
3. Use the navigation pad to go to *Max/Min/Avg/Alarm*.
4. Push the navigation pad. This displays a toolbar.
   - Select *Max* and push the navigation pad to display the maximum value.
   - Select *Min* and push the navigation pad to display the minimum value.
   - Select *Avg* and push the navigation pad to display the average value.
   - Select *Max & min markers* and push the navigation pad to display markers for the maximum and minimum values.
5. When completed, push the navigation pad down to close the upper toolbar.
6. Select *Done* and push the navigation pad.

16.5 Setting local measurement parameters for a measurement tool

16.5.1 General

When you set measurement parameters under *Settings*, all the parameters for the whole image are changed.

However, in some situations you may want to change a measurement parameter for one measurement tool only. The reason for this could be that the measurement tool is in front of a significantly more reflective surface than other surfaces in the image, or over an object that is further away than the rest of the objects in the image, and so on.

For more information about object parameters, see section 22.3.1 *Measurement parameters*, page 49.

16.5.2 Procedure

Note This procedure assumes that you have laid out a measurement tool on the screen.

Follow this procedure:

1. To select the measurement tool, touch the tool on the screen. The tool is now displayed with one or more handles.
2. Push the navigation pad. This displays a toolbar.
3. Use the navigation pad to go to *Use local parameters* .
4. Push the navigation pad. (icon with grey indicator) is displayed.
5. Push the navigation pad to activate the use of local parameters. (icon with blue indicator) is displayed together with a toolbar.
6. Select an object parameter:
   - *Emissivity*.
   - *Reflected temperature*.
   - *Object distance*.
7. Push the navigation pad to display a dialog box.
8. Push the navigation pad up/down to change the parameter.
9. When completed, push the navigation pad.

17 Working with alarms

17.1 Working with color alarms

17.1.1 General

A color alarm applies a contrasting color to all pixels with a temperature above, below, or between one or more set temperature levels.

Using a color alarm is a good method to easily discover anomalies in an infrared image.

17.1.2 Procedure

Follow this procedure:

1. Push the navigation pad to display the menu system.
2. Use the navigation pad to go to *Color*.
3. Push the navigation pad. This displays a color toolbar.

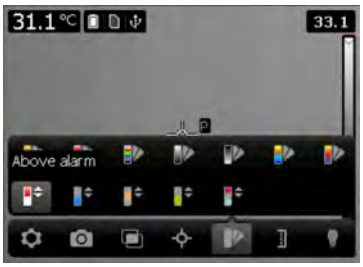

4. On the toolbar, select one of the following and push the navigation pad:
   - *Above alarm*: A color alarm that colorizes all parts of the image that are above a set temperature level. Use the navigation pad to change the temperature.
   - *Below alarm*: A color alarm that colorizes all parts of the image that are below a set temperature level. Use the navigation pad to change the temperature.
   - *Interval alarm*: An interval color alarm that colorizes all parts of the image that fall between two set temperature levels. Use the navigation pad to change the temperature levels.

17.2 Working with insulation alarms

17.2.1 General

The Insulation alarm can detect areas where there may be an insulation deficiency in a building. It will trigger when the insulation level (termed the thermal index in the camera menu) falls below or above a preset value of the energy leakage through a wall (depending on the climate conditions).

Different building codes recommend different values for the insulation level, but typical values are 60–80% for new buildings. Refer to your national building code for recommendations.

17.2.2 Procedure

Follow this procedure:

1. Push the navigation pad to display the menu system.
2. Use the navigation pad to go to *Color*.
3. Push the navigation pad.

4. Use the navigation pad to select *Insulation alarm*. This displays a dialog box.

5. Use the navigation pad to set the following parameters:
   - *Indoor temperature*: The current indoor temperature.
   - *Outdoor temperature*: The current outdoor temperature.
   - *Thermal index*: The insulation level, an integer between 0 and 100.

17.3 Working with condensation alarms

17.3.1 General

The Condensation alarm can detect areas with potential moisture problems. You can set the relative humidity above which the camera will colorize the image.

17.3.2 Procedure

Follow this procedure:

1. Push the navigation pad to display the menu system.
2. Use the navigation pad to go to *Color*.
3. Push the navigation pad.
4. Use the navigation pad to select *Condensation alarm*. This displays a dialog box.

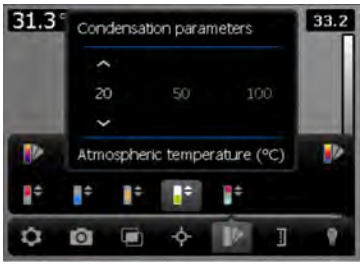

5. Use the navigation pad to set the following parameters:
   - *Atmospheric temperature*: The current atmospheric temperature.
   - *Relative humidity*: The current relative humidity.
   - *Relative humidity limit*: The relative humidity level at which you want the alarm to be triggered—100% indicates that the water vapor condenses as liquid water (= dewpoint).

18 Fetching data from external FLIR meters

18.1 General

You can fetch data from an external FLIR meter and add this data to the infrared image.

When the camera is connected to a FLIR meter via Bluetooth, the measurement value from the meter is displayed in the result table of the camera. The FLIR meter value is also added to the information saved in the image file.

18.2 Supported meters

- FLIR CM78
- FLIR CM83
- FLIR DM93
- FLIR MR77

18.3 Technical support for external meters

Website	http://www.flir.com/test
Technical support	TMSupport@flir.com
Repairs	Repair@flir.com
Phone number	+1 855-499-3662 (toll-free)

18.4 Procedure

Note This procedure assumes that you have paired the Bluetooth devices. For more information, see section 11 *Pairing Bluetooth devices*, page 23.

Follow this procedure:

1. Turn on the camera.
2. Turn on the FLIR meter.
3. On the meter, enable Bluetooth mode. Refer to the user documentation for the meter for information on how to do this.
4. On the meter, choose the quantity that you want to use (voltage, current, resistance, etc.). Refer to the user documentation for the meter for information on how to do this. Results from the meter will now automatically be displayed in the result table in the top left corner of the infrared camera screen.

18.5 Typical moisture measurement and documentation procedure

18.5.1 General

The following procedure can form the basis for other procedures using FLIR meters and infrared cameras.

18.5.2 Procedure

Follow this procedure:

1. Use the infrared camera to identify any potential damp areas behind walls and ceilings.
2. Use the moisture meter to measure the moisture levels at various suspect locations that may have been found.
3. When an area of particular interest is located, store the moisture reading in the moisture meter's memory and identify the measurement area with a handprint or other thermal identifying marker.
4. Recall the reading from the meter memory. The moisture meter will now continuously transmit this reading to the infrared camera.
5. Use the camera to take a thermal image of the area with the identifying marker. The stored data from the moisture meter will also be saved on the image.

19 Annotating images

19.1 General

This section describes how to save additional information together with an infrared image by using annotations.

Using annotations makes reporting and post-processing more efficient by providing essential information about the image or the situation when it was taken.

- You can set the camera to display annotation tools when an image is saved. For more information, see section 22.3.2.2 *Add annotation after saving*, page 50.
- You can also add annotations to a saved image in the image archive.

Note This section describes the procedures for adding annotations to a saved image in the image archive. Adding annotations when saving an image works in a similar way.

19.2 Adding a note

19.2.1 General

A text note is grouped with the image file. Using this feature, you can annotate images by entering free-form text.

19.2.2 Procedure

Follow this procedure:

1. Push to open the image archive.
2. Push the navigation pad up/down or left/right to select the image to which you want to add a text annotation.
3. Push the navigation pad to open the image.
4. Push the navigation pad to display a toolbar.
5. On the toolbar, select *Add note* and push the navigation pad. This displays a soft keyboard where you can enter the text you want to save.

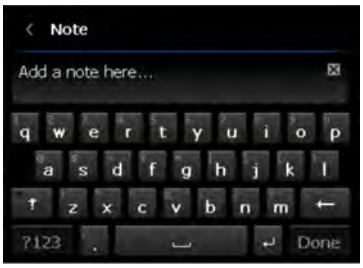

Note To select special characters, press and hold down the corresponding key on the soft keyboard.

6. When completed, touch *Done* on the soft keyboard. After the note is saved, a note icon is displayed in the bottom right corner of the image.

19.3 Adding a table

19.3.1 General

You can save a table with textual information to the image file. This feature is a very efficient way of recording information when you are inspecting a large number of similar objects. The idea behind using a table with textual information is to avoid filling out forms or inspection protocols manually.

The camera has a number of default table templates. You can also import your own table templates from FLIR Tools. The templates are stored on the memory card.

19.3.2 Procedure

Follow this procedure:

1. Push to open the image archive.
2. Push the navigation pad up/down or left/right to select the image to which you want to add a table annotation.
3. Push the navigation pad to open the image.
4. Push the navigation pad to display a toolbar.
5. On the toolbar, select *Add table* and push the navigation pad.
6. Select *Add table contents* and push the navigation pad. This displays the default template.

   Note You can select another template by first selecting *Select default template*.
7. For each row in the table, do the following:
   - Push the navigation pad. This displays the predefined values.
   - Push the navigation pad up/down to select a predefined value. Push the navigation pad to confirm.
   - Instead of selecting a predefined value, you can select the keyboard and enter other text.
8. When completed, select *Save & Exit* at the bottom of the table. Push the navigation pad to confirm.

19.4 Adding a voice annotation

19.4.1 General

A voice annotation is an audio recording that is stored in an infrared image file.

The voice annotation is recorded using a Bluetooth headset. The recording can be played back in the camera, and in image analysis and reporting software from FLIR Systems.

19.4.2 Procedure

Note This procedure assumes that you have paired the camera with a Bluetooth headset. For information on how to do this, see section 11 *Pairing Bluetooth devices*, page 23.

Follow this procedure:

1. Push to open the image archive.
2. Push the navigation pad up/down or left/right to select the image to which you want to add a voice annotation.
3. Push the navigation pad to open the image.
4. Push the navigation pad to display a toolbar.
5. On the toolbar, select *Add voice annotation* and push the navigation pad. This displays a recording toolbar.
6. Select *Record* and push the navigation pad to start a recording.
7. Select *Stop* and push the navigation pad to stop the recording.
8. Select *Play* and push the navigation pad to listen to the recording.
9. Select *Delete* and push the navigation pad to delete the recording.
10. When completed, select *Done* and push the navigation pad.

20 Recording video clips

20.1 General

You can record non-radiometric video clips in the following image modes:

- *Thermal MSX*.
- *Thermal*.
- *Picture-in-picture*.
- *Digital camera*.

The video clips can be played back in Microsoft Windows Media Player, but it will not be possible to retrieve any temperature values from them.

20.2 Procedure: Recording a video clip

Follow this procedure:

1. Push the navigation pad to display the menu system.
2. Use the navigation pad to go to *Recording mode*.
3. Push the navigation pad.
4. Select *Video* and push the navigation pad.
5. Push the Save button to start the recording. A red icon at the top of the image blinks during the recording.

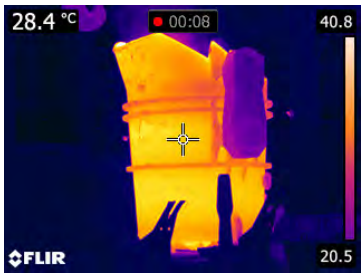

6. Push the Save button again to stop the recording.

20.3 Procedure: Playing a video clip

Follow this procedure:

1. Push to open the image archive.
2. Push the navigation pad up/down or left/right to select the video clip that you want to play.
3. Push the navigation pad to open the video clip.
4. Push the navigation pad to display a toolbar.
5. On the toolbar, select *Play* and push the navigation pad.

21 Screening alarm

21.1 General

The screening alarm can be used, for example, at airports to detect passengers with elevated body temperatures, which may indicate the presence of a fever.

Activating the screening alarm will turn on a measurement box and screening data in the result table.

The sampled average temperature.

The alarm temperature.

The measured temperature.

The alarm will trigger when the measurement box measures a temperature higher than the alarm temperature. The alarm temperature is, in turn, the sum of a specified allowed deviation and a sampled average value.

21.2 Procedure

NOTE

- The screening mode must be enabled. Select (*Settings*) > *Device settings* > *Set up camera* > *Screening mode* = *On*.
- The screening alarm deactivates any setting that puts the camera in standby mode.

Follow this procedure:

1. Push the navigation pad to display the menu system.
2. Use the navigation pad to go to (*Recording mode*).
3. Push the navigation pad. This displays a submenu.
4. Select (*Screening*).
5. Push the navigation pad. This displays a dialog box where you can define the settings for the alarm.
   - *Allowed deviation*: The allowed deviation from the sampled average.
   - *Alarm sound*: Applicable values are *Beep* or *No sound*.
6. Push the navigation pad. This closes the dialog box.
7. Aim the camera toward a point of interest. The object should be within the frame of the measurement box.
8. Tap and hold the icon to reset the sampled average.
9. Tap the icon to sample.
10. Aim the camera toward more points of interest. Sample 10 times to build up a sample base by tapping the icon.

    The alarm is now set up and ready to use. Occasionally record a few samples if the alarm is used for a long time or if the conditions change.

NOTE

- The algorithm has a memory of the last 10 samples. It discriminates between the highest and lowest values, and calculates an average of the remaining values.
- Do not modify the measurement setup or activate another alarm because this will deactivate the screening alarm.

22 Changing settings

22.1 General

You can change a variety of settings in the camera. You do this in the *Settings* dialog box.

22.2 Procedure

Follow this procedure:

1. Push the navigation pad to display the menu system.
2. Use the navigation pad to go to *Settings*.
3. Push the navigation pad.
4. Select the setting you want to change. By selecting some settings, additional dialog boxes are displayed.
5. Use the navigation pad to navigate in menus or change values.
6. Push to go back.

22.3 Description of the various settings

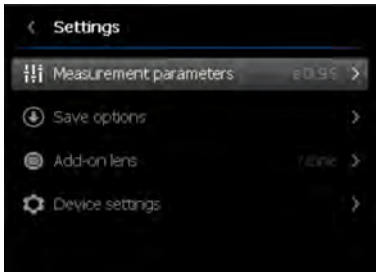

22.3.1 Measurement parameters

22.3.1.1 General

For accurate measurements, you must set the object parameters.

22.3.1.2 Types of parameters

The camera can use these object parameters:

- *Emissivity*, i.e., how much radiation an object emits, compared with the radiation of a theoretical reference object of the same temperature (called a “blackbody”). The opposite of emissivity is reflectivity. The emissivity determines how much of the radiation originates from the object as opposed to being reflected by it.
- *Reflected temperature*, which is used when compensating for the radiation from the surroundings reflected by the object into the camera. This property of the object is called reflectivity.
- *Distance*, i.e., the distance between the camera and the object of interest.
- *Relative humidity*, i.e., the relative humidity of the air between the camera and the object of interest.
- *Atmospheric temperature*, i.e., the temperature of the air between the camera and the object of interest.
- *Window compensation*, i.e., the temperature of any protective windows, etc., that are set up between the camera and the object of interest. If no protective window or protective shield is used, this value is irrelevant and should be left inactive.

22.3.1.3 Recommended values

If you are unsure about the values, the following are recommended:

Emissivity	0.95
Reflected temperature	+20°C (+69°F)
Distance	1.0 m (3.3 ft.)

Relative humidity	50%
Atmospheric temperature	+20°C (+69°F)

22.3.2 Save options

22.3.2.1 *Preview image before saving*

Preview image before saving: This setting defines if a preview image will be displayed before the image is saved.

22.3.2.2 *Add annotation after saving*

Add annotation after saving: This setting defines if an annotation tool will be displayed when the image has been saved. Available options are:

- *Save*: No annotation tool is displayed.
- *Save & add note*: The note annotation tool is displayed.
- *Save & add table*: The table annotation tool is displayed. This setting also allows you to define the type of table. Available options are *Inspection - default*, *Text field - default*, and *SEC*. You can also create your own table in FLIR Tools and upload it to the camera.
- *Save & add voice annotation*: The voice annotation tool is displayed.
- *Save & add any annotation*: The annotation tool menu is displayed.

22.3.2.3 *Photo as separate JPEG*

Photo as separate JPEG: This setting defines if a digital photo will be saved as a separate file with a full field of view. If this setting is disabled, the digital photo will be saved with the same field of view as the infrared image.

22.3.3 Add-on lens

This setting defines which accessory lens has been mounted on the camera. Available choices are *None*, *FOV X (serial number)*.

22.3.4 Device settings

22.3.4.1 Set up camera

22.3.4.1.1 Camera temperature range

This setting defines the camera's calibrated temperature range. Different camera models have different temperature ranges. Select a range that suits your measurement situation.

22.3.4.1.2 Auto orientation

This setting defines whether *Auto orientation* is enabled or disabled. When *Auto orientation* is enabled, the orientation of the overlay graphics will change according to how you hold the camera.

22.3.4.1.3 Display intensity

This setting defines the light intensity of the display. Available options are *Low*, *Medium*, and *High*.

22.3.4.1.4 Auto power off

This setting defines how soon the camera is automatically turned off. Available choices are *Off*, *5 min*, and *20 min*.

22.3.4.1.5 Video output format

This setting defines the video output format from the video out connector (i.e., the TV format). Available choices are *PAL* and *NTSC*.

22.3.4.1.6 Level span mode

This setting specifies the type of manual image adjust mode. Available options are *Level / max / min* and *Level / span*. For more information, see section 14.5 *Adjusting an infrared image*, page 32.

22.3.4.1.7 Calibrate touchscreen

This setting allows calibration of the touchscreen. For more information, see section 13.7 *Calibrating the touchscreen*, page 29.

22.3.4.2 Wi-Fi

This setting defines Wi-Fi networks. For more information, see section 12 *Configuring Wi-Fi*, page 24.

22.3.4.3 Bluetooth including METERLiNK

This setting defines Bluetooth connectivity. For more information, see section 11 *Pairing Bluetooth devices*, page 23.

22.3.4.4 Language, time, and units

This setting defines a number of regional parameters:

- *Language*.
- *Temperature unit*.
- *Distance unit*.
- *Date and time*.
- *Date and time format*.

22.3.4.5 Reset options

This setting defines a number or reset options:

- *Reset default camera mode*: This will affect color palettes and measurement tools. Saved images will not be affected.
- *Reset device settings to factory default*: This will affect all camera settings, including regional settings. Saved images will not be affected. The camera will be restarted.
- *Delete all saved images*: This setting will delete all saved images in the image archive.

22.3.4.6 Camera information

This dialog displays camera information such as the model, serial number, part number, and software version. No changes can be made.

23 Technical data

23.1 Online field-of-view calculator

Please visit http://support.flir.com and click the photo of the camera series for field-of-view tables for all lens–camera combinations.

23.2 Note about technical data

FLIR Systems reserves the right to change specifications at any time without prior notice. Please check http://support.flir.com for latest changes.

23.3 Note about authoritative versions

The authoritative version of this publication is English. In the event of divergences due to translation errors, the English text has precedence.

Any late changes are first implemented in English.

23.4 FLIR E33

P/N: 64502-0801
Rev.: 35207

General description
The FLIR Exx series cameras are compact and rugged infrared cameras that can be used in harsh environments while still providing you with the latest technology such as a modern touch screen. A FLIR Exx series camera is the perfect choice when you are looking for a robust but feature-rich camera at an affordable price.
Benefits:
• Robust and sophisticated: The FLIR Exx series cameras have a robust and light-weight design and can withstand a 2 m drop. Large buttons combined with a modern touch screen and extensive measuring capabilities, they are the right choice for demanding inspections in the field. • Best value for money: The FLIR Exx series cameras combine good performance (up to 320 × 240 pixels), a user-friendly interface, and a rugged point-and-shoot design with an affordable price.

Imaging and optical data	
IR resolution	160 × 120 pixels
Thermal sensitivity/NETD	< 0.07°C @ +30°C (+86°F) / 70 mK
Field of view (FOV)	25° × 19°
Minimum focus distance	0.4 m (1.31 ft.)
Focal length	18 mm (0.7 in.)
Spatial resolution (IFOV)	2.72 mrad
F-number	1.3
Image frequency	60 Hz
Focus	Manual
Digital zoom	2× and 4×
Panning	Panning over zoomed-in images

Detector data	
Detector type	Focal plane array (FPA), uncooled microbolometer
Spectral range	7.5–13 µm

Image presentation	
Display	Touch screen, 3.5 in. LCD, 320 × 240 pixels
Image adjustment	Auto or manual

Image presentation modes	
Image modes	IR image, visual image, MSX, picture in picture, thumbnail gallery
Picture in Picture	IR area on visual image

Measurement	
Object temperature range	• –20°C to +120°C (–4°F to +248°F) • 0°C to +650°C (+32°F to +1202°F)
Accuracy	±2°C (±3.6°F) or ±2% of reading, for ambient temperature 10°C to 35°C (+50°F to 95°F)

Measurement analysis	
Spotmeter	3
Area	Box with max./min./average
Automatic hot/cold detection	Auto hot or cold spotmeter markers within area

Measurement analysis	
Difference temperature	Delta temperature between measurement functions or reference temperature
Reference temperature	Manually set or captured from any measurement function
Emissivity correction	Variable from 0.01 to 1.0 or selected from materials list
External optics/windows correction	Automatic, based on inputs of optics/window transmission and temperature
Measurement corrections	Reflected temperature, optics transmission and atmospheric transmission

Set-up	
Color palettes	Arctic, Gray, Iron, Lava, Rainbow and Rainbow HC
Set-up commands	Local adaptation of units, language, date and time formats

Storage of images	
Image storage	Standard JPEG, including measurement data, on memory card
Image storage mode	Simultaneous storage of images in IR, visual and MSX

Image annotations	
Text	Text from predefined list or soft keyboard on touch screen
Report generation	• FLIR Tools software specifically designed to provide an easy way to create inspection reports. It is available on the major platforms – Android, Windows, MacOS, and iOS.

Video recording in camera	
Non-radiometric IR video recording	MPEG-4 to memory card

Video streaming	
Radiometric IR video streaming	Full dynamic to PC using USB
Non-radiometric IR video streaming	Uncompressed colorized video using USB

Digital camera	
Built-in digital camera	3.1 Mpixels (2048 × 1536 pixels), and one LED light
Digital camera, focus	Fixed focus
Built-in digital lens data	FOV 53° × 41°
Digital camera, aspect ratio	4:3

Laser pointer	
Laser	Activated by dedicated button
Laser alignment	Position is automatic displayed on the IR image
Laser classification	Class 2
Laser type	Semiconductor AlGaInP diode laser
Laser power	1 mW
Laser wavelength	635 nm (red)

Data communication interfaces	
SD Card	One card slot for removable SD memory cards

USB	
USB	• USB-A: Connect external USB device • USB Mini-B: Data transfer to and from PC / uncompressed colorized video
USB, standard	USB Mini-B: 2.0
USB, connector type	• USB-A connector • USB Mini-B connector

Composite video	
Video out	Composite
Video, standard	CVBS (ITU-R-BT.470 PAL/SMPTE 170M NTSC)
Video, connector type	4-pole 3.5 mm jack

Power system	
Battery type	Rechargeable Li ion battery
Battery voltage	3.7 V
Battery capacity	4.4 Ah, at +20°C to +25°C (+68°F to +77°F)
Battery operating time	Approx. 4 hours at +25°C (+77°F) ambient temperature and typical use
Charging system	In camera (AC adapter or 12 V from a vehicle) or 2-bay charger
Charging time	4 h to 90% capacity, charging status indicated by LED's
Charging temperature	0°C to +45°C (+32°F to +113°F)
Power management	Automatic shutdown and sleep mode (user selectable)
AC operation	AC adapter, 90–260 VAC input, 12 V output to camera
Start-up time from sleep mode	Instant on

Environmental data	
Operating temperature range	–15°C to +50°C (+5°F to +122°F)
Storage temperature range	–40°C to +70°C (–40°F to +158°F)
Humidity (operating and storage)	IEC 60068-2-30/24 h 95% relative humidity +25°C to +40°C (+77°F to +104°F) / 2 cycles
EMC	• EN 61000-6-2 (Immunity) • EN 61000-6-3 (Emission) • FCC 47 CFR Part 15 B (Emission)
Magnetic fields	EN 61 000-4-8, Test level 5 for continuous field (severe industrial environment)
Encapsulation	IP 54 (IEC 60529)
Shock	25 g (IEC 60068-2-27)
Vibration	2 g (IEC 60068-2-6)
Drop	2 m (6.6 ft.)
Safety	EN/UL/CSA/PSE 60950-1

Physical data	
Camera weight, incl. battery	0.869 kg (1.91 lb.)
Camera size (L × W × H)	246 × 97 × 184 mm (9.7 × 3.8 × 7.2 in.)
Tripod mounting	UNC ¼"-20 (adapter needed)

Physical data	
Material	• Polycarbonate + acrylonitrile butadiene styrene (PC-ABS) • Thixomold magnesium • Thermoplastic elastomer (TPE)
Color	Graphite gray and black

Shipping information	
Packaging, type	Cardboard box
List of contents	• Hard transport case • Infrared camera with lens • Battery • Handstrap • Memory card • Power supply, incl. multi-plugs • Printed documentation • USB cable • Video cable
Packaging, weight	5.2 kg (11.5 lb.)
Packaging, size	500 × 190 × 370 mm (19.7 × 7.5 × 14.6 in.)
EAN-13	4743254001206
UPC-12	845188005238
Country of origin	Estonia

Supplies & accessories:

- 1196961; IR lens, f = 30 mm, 15° incl. case
- 1196960; IR lens, f = 10 mm, 45° incl. case
- T910814; Power supply, incl. multi plugs
- T911230ACC; Memory card SDHC 4 GB
- 1910423; USB cable Std A <-> Mini-B
- T198509; Cigarette lighter adapter kit, 12 VDC, 1.2 m/3.9 ft.
- 1910582ACC; Video cable
- T911093; Tool belt
- T198125; Battery charger, incl. power supply with multi plugs (Exx, Kxx)
- T199235; High-temperature lens
- T198113; IR lens, 76 mm (6°) with case and mounting support for Exx
- T198487; Li-Ion Battery pack 3.7V 17Wh
- T198484; Pouch for FLIR Exx series
- T198485; Sun shield
- T198341ACC; Transport case Exx
- T198486; Tripod Adapter
- T199363ACC; Battery Li-ion 3.6 V, 5.2 Ah, 19 Wh
- 19250-100; IR Window 2 in
- 19251-100; IR Window 3 in.
- 19252-100; IR Window 4 in.
- 19250-200; SS IR Window 2 in.
- 19251-200; SS IR Window 3 in.
- 19252-200; SS IR Window 4 in.
- T198586; FLIR Reporter Professional (license only)
- T198584; FLIR Tools
- T198583; FLIR Tools+ (download card incl. license key)
- DSW-10000; FLIR IR Camera Player
- T198697; FLIR ResearchIR Max + HSDR 4 (hardware sec. dev.)
- T199014; FLIR ResearchIR Max + HSDR 4 (printed license key)
- T199044; FLIR ResearchIR Max + HSDR 4 Upgrade (printed license key)
- T198696; FLIR ResearchIR Max 4 (hardware sec. dev.)
- T199013; FLIR ResearchIR Max 4 (printed license key)
- T199043; FLIR ResearchIR Max 4 Upgrade (printed license key)

- T198731; FLIR ResearchIR Standard 4 (hardware sec. dev.)
- T199012; FLIR ResearchIR Standard 4 (printed license key)
- T199042; FLIR ResearchIR Standard 4 Upgrade (printed license key)
- T199233; FLIR Atlas SDK for .NET
- T199234; FLIR Atlas SDK for MATLAB

23.5 FLIR E40

P/N: 64502-1001
Rev.: 35207

General description
The FLIR Exx series cameras are compact and rugged infrared cameras that can be used in harsh environments while still providing you with the latest technology such as a modern touch screen. A FLIR Exx series camera is the perfect choice when you are looking for a robust but feature-rich camera at an affordable price.
Benefits:
• Robust and sophisticated: The FLIR Exx series cameras have a robust and light-weight design and can withstand a 2 m drop. Large buttons combined with a modern touch screen and extensive measuring capabilities, they are the right choice for demanding inspections in the field. • Best value for money: The FLIR Exx series cameras combine good performance (up to 320 × 240 pixels), a user-friendly interface, and a rugged point-and-shoot design with an affordable price.

Imaging and optical data	
IR resolution	160 × 120 pixels
Thermal sensitivity/NETD	< 0.07°C @ +30°C (+86°F) / 70 mK
Field of view (FOV)	25° × 19°
Minimum focus distance	0.4 m (1.31 ft.)
Focal length	18 mm (0.7 in.)
Spatial resolution (IFOV)	2.72 mrad
F-number	1.3
Image frequency	60 Hz
Focus	Manual
Digital zoom	2×
Panning	Panning over zoomed-in images

Detector data	
Detector type	Focal plane array (FPA), uncooled microbolometer
Spectral range	7.5–13 µm

Image presentation	
Display	Touch screen, 3.5 in. LCD, 320 × 240 pixels
Image adjustment	Auto or manual

Image presentation modes	
Image modes	IR image, visual image, MSX, picture in picture, thumbnail gallery
Picture in Picture	IR area on visual image

Measurement	
Object temperature range	• –20°C to +120°C (–4°F to +248°F) • 0°C to +650°C (+32°F to +1202°F)
Accuracy	±2°C (±3.6°F) or ±2% of reading, for ambient temperature 10°C to 35°C (+50°F to 95°F)

Measurement analysis	
Spotmeter	3
Area	3 boxes with max./min./average
Automatic hot/cold detection	Auto hot or cold spotmeter markers within area

Measurement analysis	
Difference temperature	Delta temperature between measurement functions or reference temperature
Reference temperature	Manually set or captured from any measurement function
Emissivity correction	Variable from 0.01 to 1.0 or selected from materials list
External optics/windows correction	Automatic, based on inputs of optics/window transmission and temperature
Measurement corrections	Reflected temperature, optics transmission and atmospheric transmission

Set-up	
Color palettes	Arctic, Gray, Iron, Lava, Rainbow and Rainbow HC
Set-up commands	Local adaptation of units, language, date and time formats

Storage of images	
Image storage	Standard JPEG, including measurement data, on memory card
Image storage mode	Simultaneous storage of images in IR, visual and MSX

Image annotations	
Text	Text from predefined list or soft keyboard on touch screen
Report generation	• FLIR Tools software specifically designed to provide an easy way to create inspection reports. It is available on the major platforms – Android, Windows, MacOS, and iOS.

Video recording in camera	
Non-radiometric IR video recording	MPEG-4 to memory card

Video streaming	
Radiometric IR video streaming	Full dynamic to PC using USB
Non-radiometric IR video streaming	Uncompressed colorized video using USB

Digital camera	
Built-in digital camera	3.1 Mpixels (2048 × 1536 pixels), and one LED light
Digital camera, focus	Fixed focus
Built-in digital lens data	FOV 53° × 41°
Digital camera, aspect ratio	4:3

Laser pointer	
Laser	Activated by dedicated button
Laser alignment	Position is automatic displayed on the IR image
Laser classification	Class 2
Laser type	Semiconductor AlGaInP diode laser
Laser power	1 mW
Laser wavelength	635 nm (red)

Data communication interfaces	
SD Card	One card slot for removable SD memory cards

USB	
USB	• USB-A: Connect external USB device • USB Mini-B: Data transfer to and from PC / uncompressed colorized video
USB, standard	USB Mini-B: 2.0
USB, connector type	• USB-A connector • USB Mini-B connector

Composite video	
Video out	Composite
Video, standard	CVBS (ITU-R-BT.470 PAL/SMPTE 170M NTSC)
Video, connector type	4-pole 3.5 mm jack

Power system	
Battery type	Rechargeable Li ion battery
Battery voltage	3.7 V
Battery capacity	4.4 Ah, at +20°C to +25°C (+68°F to +77°F)
Battery operating time	Approx. 4 hours at +25°C (+77°F) ambient temperature and typical use
Charging system	In camera (AC adapter or 12 V from a vehicle) or 2-bay charger
Charging time	4 h to 90% capacity, charging status indicated by LED's
Charging temperature	0°C to +45°C (+32°F to +113°F)
Power management	Automatic shutdown and sleep mode (user selectable)
AC operation	AC adapter, 90–260 VAC input, 12 V output to camera
Start-up time from sleep mode	Instant on

Environmental data	
Operating temperature range	–15°C to +50°C (+5°F to +122°F)
Storage temperature range	–40°C to +70°C (–40°F to +158°F)
Humidity (operating and storage)	IEC 60068-2-30/24 h 95% relative humidity +25°C to +40°C (+77°F to +104°F) / 2 cycles
EMC	• EN 61000-6-2 (Immunity) • EN 61000-6-3 (Emission) • FCC 47 CFR Part 15 B (Emission)
Magnetic fields	EN 61 000-4-8, Test level 5 for continuous field (severe industrial environment)
Encapsulation	IP 54 (IEC 60529)
Shock	25 g (IEC 60068-2-27)
Vibration	2 g (IEC 60068-2-6)
Drop	2 m (6.6 ft.)
Safety	EN/UL/CSA/PSE 60950-1

Physical data	
Camera weight, incl. battery	0.869 kg (1.91 lb.)
Camera size (L × W × H)	246 × 97 × 184 mm (9.7 × 3.8 × 7.2 in.)
Tripod mounting	UNC ¼"-20 (adapter needed)

Physical data	
Material	• Polycarbonate + acrylonitrile butadiene styrene (PC-ABS) • Thixomold magnesium • Thermoplastic elastomer (TPE)
Color	Graphite gray and black

Shipping information	
Packaging, type	Cardboard box
List of contents	• Hard transport case • Infrared camera with lens • Battery • Handstrap • Memory card • Power supply, incl. multi-plugs • Printed documentation • USB cable • Video cable
Packaging, weight	5.2 kg (11.5 lb.)
Packaging, size	500 × 190 × 370 mm (19.7 × 7.5 × 14.6 in.)
EAN-13	4743254001220
UPC-12	845188005252
Country of origin	Estonia

Supplies & accessories:

- 1196961; IR lens, f = 30 mm, 15° incl. case
- 1196960; IR lens, f = 10 mm, 45° incl. case
- T910814; Power supply, incl. multi plugs
- T911230ACC; Memory card SDHC 4 GB
- 1910423; USB cable Std A <-> Mini-B
- T198509; Cigarette lighter adapter kit, 12 VDC, 1.2 m/3.9 ft.
- 1910582ACC; Video cable
- T911093; Tool belt
- T198125; Battery charger, incl. power supply with multi plugs (Exx, Kxx)
- T199235; High-temperature lens
- T198113; IR lens, 76 mm (6°) with case and mounting support for Exx
- T198487; Li-Ion Battery pack 3.7V 17Wh
- T198484; Pouch for FLIR Exx series
- T198485; Sun shield
- T198341ACC; Transport case Exx
- T198486; Tripod Adapter
- T199363ACC; Battery Li-ion 3.6 V, 5.2 Ah, 19 Wh
- 19250-100; IR Window 2 in
- 19251-100; IR Window 3 in.
- 19252-100; IR Window 4 in.
- 19250-200; SS IR Window 2 in.
- 19251-200; SS IR Window 3 in.
- 19252-200; SS IR Window 4 in.
- T198586; FLIR Reporter Professional (license only)
- T198584; FLIR Tools
- T198583; FLIR Tools+ (download card incl. license key)
- DSW-10000; FLIR IR Camera Player
- T198697; FLIR ResearchIR Max + HSDR 4 (hardware sec. dev.)
- T199014; FLIR ResearchIR Max + HSDR 4 (printed license key)
- T199044; FLIR ResearchIR Max + HSDR 4 Upgrade (printed license key)
- T198696; FLIR ResearchIR Max 4 (hardware sec. dev.)
- T199013; FLIR ResearchIR Max 4 (printed license key)
- T199043; FLIR ResearchIR Max 4 Upgrade (printed license key)

- T198731; FLIR ResearchIR Standard 4 (hardware sec. dev.)
- T199012; FLIR ResearchIR Standard 4 (printed license key)
- T199042; FLIR ResearchIR Standard 4 Upgrade (printed license key)
- T199233; FLIR Atlas SDK for .NET
- T199234; FLIR Atlas SDK for MATLAB

23.6 FLIR E40 (incl. Wi-Fi)

P/N: 64501-0101
Rev.: 35207

General description
The FLIR Exx series cameras are compact and rugged infrared cameras that can be used in harsh environments while still providing you with the latest technology such as a modern touch screen and wireless connectivity. A FLIR Exx series camera is the perfect choice when you are looking for a robust but feature-rich camera at an affordable price.
Benefits:
• Robust and sophisticated: The FLIR Exx series cameras have a robust and light-weight design and can withstand a 2 m drop. Large buttons combined with a modern touch screen and extensive measuring capabilities, they are the right choice for demanding inspections in the field. • Easy communication: The Wi-Fi connectivity of the FLIR Exx series cameras allows you to connect to smart phones and tablets, for the wireless transfer of images or the remote control of the camera. The Bluetooth-based METERLiNK function transfers readings from external measurement instruments to the infrared image. • Best value for money: The FLIR Exx series cameras combine good performance (up to 320 × 240 pixels), a user-friendly interface, and a rugged point-and-shoot design with an affordable price.

Imaging and optical data	
IR resolution	160 × 120 pixels
Thermal sensitivity/NETD	<0.07°C @ +30°C (+86°F) / 70 mK
Field of view (FOV)	25° × 19°
Minimum focus distance	0.4 m (1.31 ft.)
Focal length	18 mm (0.7 in.)
Spatial resolution (IFOV)	2.72 mrad
F-number	1.3
Image frequency	60 Hz
Focus	Manual
Digital zoom	2×
Panning	Panning over zoomed-in images

Detector data	
Detector type	Focal plane array (FPA), uncooled microbolometer
Spectral range	7.5–13 µm

Image presentation	
Display	Touch screen, 3.5 in. LCD, 320 × 240 pixels
Image adjustment	Auto or manual

Image presentation modes	
Image modes	IR image, visual image, MSX, picture in picture, thumbnail gallery
Picture in Picture	IR area on visual image

Measurement	
Object temperature range	• –20°C to +120°C (–4°F to +248°F) • 0°C to +650°C (+32°F to +1202°F)
Accuracy	±2°C (±3.6°F) or ±2% of reading, for ambient temperature 10°C to 35°C (+50°F to 95°F)

Measurement analysis	
Spotmeter	3
Area	3 boxes with max./min./average
Automatic hot/cold detection	Auto hot or cold spotmeter markers within area
Difference temperature	Delta temperature between measurement functions or reference temperature
Reference temperature	Manually set or captured from any measurement function
Emissivity correction	Variable from 0.01 to 1.0 or selected from materials list
External optics/windows correction	Automatic, based on inputs of optics/window transmission and temperature
Measurement corrections	Reflected temperature, optics transmission and atmospheric transmission

Set-up	
Color palettes	Arctic, Gray, Iron, Lava, Rainbow and Rainbow HC
Set-up commands	Local adaptation of units, language, date and time formats

Storage of images	
Image storage	Standard JPEG, including measurement data, on memory card
Image storage mode	Simultaneous storage of images in IR, visual and MSX

Image annotations	
Voice	60 seconds (via Bluetooth)
Text	Text from predefined list or soft keyboard on touch screen
METERLiNK	Wireless connection (Bluetooth) to: FLIR meters with METERLiNK
Report generation	• FLIR Tools software specifically designed to provide an easy way to create inspection reports. It is available on the major platforms – Android, Windows, MacOS, and iOS.

Video recording in camera	
Non-radiometric IR video recording	MPEG-4 to memory card

Video streaming	
Radiometric IR video streaming	Full dynamic to PC using USB
Non-radiometric IR video streaming	Uncompressed colorized video using USB

Digital camera	
Built-in digital camera	3.1 Mpixels (2048 × 1536 pixels), and one LED light
Digital camera, focus	Fixed focus
Built-in digital lens data	FOV 53° × 41°
Digital camera, aspect ratio	4:3

Laser pointer	
Laser	Activated by dedicated button
Laser alignment	Position is automatic displayed on the IR image

Laser pointer	
Laser classification	Class 2
Laser type	Semiconductor AlGaInP diode laser
Laser power	1 mW
Laser wavelength	635 nm (red)

Data communication interfaces	
Wi-Fi	Peer-to-peer (ad hoc) or infrastructure (network)
SD Card	One card slot for removable SD memory cards
Audio	Microphone headset via Bluetooth for voice annotation of images

USB	
USB	• USB-A: Connect external USB device • USB Mini-B: Data transfer to and from PC / uncompressed colorized video
USB, standard	USB Mini-B: 2.0
USB, connector type	• USB-A connector • USB Mini-B connector

Composite video	
Video out	Composite
Video, standard	CVBS (ITU-R-BT.470 PAL/SMPTE 170M NTSC)
Video, connector type	4-pole 3.5 mm jack

Radio	
Wi-Fi	Standard: 802.11 b/g Frequency range: 2412–2462 MHz Max. output power: 15 dBm
Bluetooth	Frequency range: 2402–2480 MHz
Antenna	Internal

Power system	
Battery type	Rechargeable Li ion battery
Battery voltage	3.7 V
Battery capacity	4.4 Ah, at +20°C to +25°C (+68°F to +77°F)
Battery operating time	Approx. 4 hours at +25°C (+77°F) ambient temperature and typical use
Charging system	In camera (AC adapter or 12 V from a vehicle) or 2-bay charger
Charging time	4 h to 90% capacity, charging status indicated by LED's
Charging temperature	0°C to +45°C (+32°F to +113°F)
Power management	Automatic shutdown and sleep mode (user selectable)
AC operation	AC adapter, 90–260 VAC input, 12 V output to camera
Start-up time from sleep mode	Instant on

Environmental data	
Operating temperature range	–15°C to +50°C (+5°F to +122°F)
Storage temperature range	–40°C to +70°C (–40°F to +158°F)

Environmental data	
Humidity (operating and storage)	IEC 60068-2-30/24 h 95% relative humidity +25°C to +40°C (+77°F to +104°F) / 2 cycles
EMC	• ETSI EN 301 489-1 (radio) • ETSI EN 301 489-17 • EN 61000-6-2 (Immunity) • EN 61000-6-3 (Emission) • FCC 47 CFR Part 15 B (Emission) • ICES-003
Radio spectrum	• ETSI EN 300 328 • FCC Part 15.247 • RSS-210
Magnetic fields	EN 61 000-4-8, Test level 5 for continuous field (severe industrial environment)
Encapsulation	IP 54 (IEC 60529)
Shock	25 g (IEC 60068-2-27)
Vibration	2 g (IEC 60068-2-6)
Drop	2 m (6.6 ft.)
Safety	EN/UL/CSA/PSE 60950-1

Physical data	
Camera weight, incl. battery	0.869 kg (1.91 lb.)
Camera size (L × W × H)	246 × 97 × 184 mm (9.7 × 3.8 × 7.2 in.)
Tripod mounting	UNC ¼"-20 (adapter needed)
Material	• Polycarbonate + acrylonitrile butadiene styrene (PC-ABS) • Thixomold magnesium • Thermoplastic elastomer (TPE)
Color	Graphite gray and black

Shipping information	
Packaging, type	Cardboard box
List of contents	• Hard transport case • Infrared camera with lens • Battery • Handstrap • Memory card • Power supply, incl. multi-plugs • Printed documentation • USB cable • Video cable
Packaging, weight	5.2 kg (11.5 lb.)
Packaging, size	500 × 190 × 370 mm (19.7 × 7.5 × 14.6 in.)
EAN-13	4743254001138
UPC-12	845188005160
Country of origin	Estonia

Supplies & accessories:

- 1196961; IR lens, f = 30 mm, 15° incl. case
- 1196960; IR lens, f = 10 mm, 45° incl. case
- T910814; Power supply, incl. multi plugs
- T911230ACC; Memory card SDHC 4 GB
- 1910423; USB cable Std A <-> Mini-B
- T198509; Cigarette lighter adapter kit, 12 VDC, 1.2 m/3.9 ft.
- 1910582ACC; Video cable

- T197771ACC; Bluetooth Headset
- T911093; Tool belt
- T198125; Battery charger, incl. power supply with multi plugs (Exx, Kxx)
- T199235; High-temperature lens
- T198113; IR lens, 76 mm (6°) with case and mounting support for Exx
- T198487; Li-Ion Battery pack 3.7V 17Wh
- T198484; Pouch for FLIR Exx series
- T198485; Sun shield
- T198341ACC; Transport case Exx
- T198486; Tripod Adapter
- T199363ACC; Battery Li-ion 3.6 V, 5.2 Ah, 19 Wh
- 19250-100; IR Window 2 in
- 19251-100; IR Window 3 in.
- 19252-100; IR Window 4 in.
- 19250-200; SS IR Window 2 in.
- 19251-200; SS IR Window 3 in.
- 19252-200; SS IR Window 4 in.
- T198586; FLIR Reporter Professional (license only)
- T198584; FLIR Tools
- T198583; FLIR Tools+ (download card incl. license key)
- DSW-10000; FLIR IR Camera Player
- APP-10002; FLIR Tools Mobile (Android Application)
- APP-10004; FLIR Tools (MacOS Application)
- T198697; FLIR ResearchIR Max + HSDR 4 (hardware sec. dev.)
- T199014; FLIR ResearchIR Max + HSDR 4 (printed license key)
- T199044; FLIR ResearchIR Max + HSDR 4 Upgrade (printed license key)
- T198696; FLIR ResearchIR Max 4 (hardware sec. dev.)
- T199013; FLIR ResearchIR Max 4 (printed license key)
- T199043; FLIR ResearchIR Max 4 Upgrade (printed license key)
- T198731; FLIR ResearchIR Standard 4 (hardware sec. dev.)
- T199012; FLIR ResearchIR Standard 4 (printed license key)
- T199042; FLIR ResearchIR Standard 4 Upgrade (printed license key)
- T199233; FLIR Atlas SDK for .NET
- T199234; FLIR Atlas SDK for MATLAB

23.7 FLIR E40 with SC kit (incl. Wi-Fi and 45° lens)

P/N: 64501-0103
Rev.: 35207

General description
The FLIR Exx series cameras are compact and rugged infrared cameras that can be used in harsh environments while still providing you with the latest technology such as a modern touch screen and wireless connectivity. A FLIR Exx series camera is the perfect choice when you are looking for a robust but feature-rich camera at an affordable price.
Benefits:
• Robust and sophisticated: The FLIR Exx series cameras have a robust and light-weight design and can withstand a 2 m drop. Large buttons combined with a modern touch screen and extensive measuring capabilities, they are the right choice for demanding inspections in the field. • Easy communication: The Wi-Fi connectivity of the FLIR Exx series cameras allows you to connect to smart phones and tablets, for the wireless transfer of images or the remote control of the camera. The Bluetooth-based METERLiNK function transfers readings from external measurement instruments to the infrared image. • Best value for money: The FLIR Exx series cameras combine good performance (up to 320 × 240 pixels), a user-friendly interface, and a rugged point-and-shoot design with an affordable price.

Imaging and optical data	
IR resolution	160 × 120 pixels
Thermal sensitivity/NETD	< 0.07°C @ +30°C (+86°F) / 70 mK
Field of view (FOV)	25° × 19°
Minimum focus distance	0.4 m (1.31 ft.)
Focal length	18 mm (0.7 in.)
Spatial resolution (IFOV)	2.72 mrad
F-number	1.3
Image frequency	60 Hz
Focus	Manual
Digital zoom	2×
Panning	Panning over zoomed-in images

Detector data	
Detector type	Focal plane array (FPA), uncooled microbolometer
Spectral range	7.5–13 µm

Image presentation	
Display	Touch screen, 3.5 in. LCD, 320 × 240 pixels
Image adjustment	Auto or manual

Image presentation modes	
Image modes	IR image, visual image, MSX, picture in picture, thumbnail gallery
Picture in Picture	IR area on visual image

Measurement	
Object temperature range	• –20°C to +120°C (–4°F to +248°F) • 0°C to +650°C (+32°F to +1202°F)
Accuracy	±2°C (±3.6°F) or ±2% of reading, for ambient temperature 10°C to 35°C (+50°F to 95°F)

Measurement analysis	
Spotmeter	3
Area	3 boxes with max./min./average
Automatic hot/cold detection	Auto hot or cold spotmeter markers within area
Difference temperature	Delta temperature between measurement functions or reference temperature
Reference temperature	Manually set or captured from any measurement function
Emissivity correction	Variable from 0.01 to 1.0 or selected from materials list
External optics/windows correction	Automatic, based on inputs of optics/window transmission and temperature
Measurement corrections	Reflected temperature, optics transmission and atmospheric transmission

Set-up	
Color palettes	Arctic, Gray, Iron, Lava, Rainbow and Rainbow HC
Set-up commands	Local adaptation of units, language, date and time formats

Storage of images	
Image storage	Standard JPEG, including measurement data, on memory card
Image storage mode	Simultaneous storage of images in IR, visual and MSX

Image annotations	
Text	Text from predefined list or soft keyboard on touch screen
Report generation	• FLIR Tools software specifically designed to provide an easy way to create inspection reports. It is available on the major platforms – Android, Windows, MacOS, and iOS.

Video recording in camera	
Non-radiometric IR video recording	MPEG-4 to memory card

Video streaming	
Radiometric IR video streaming	Full dynamic to PC using USB
Non-radiometric IR video streaming	Uncompressed colorized video using USB

Digital camera	
Built-in digital camera	3.1 Mpixels (2048 × 1536 pixels), and one LED light
Digital camera, focus	Fixed focus
Built-in digital lens data	FOV 53° × 41°
Digital camera, aspect ratio	4:3

Laser pointer	
Laser	Activated by dedicated button
Laser alignment	Position is automatic displayed on the IR image
Laser classification	Class 2
Laser type	Semiconductor AlGaInP diode laser

Laser pointer	
Laser power	1 mW
Laser wavelength	635 nm (red)

Data communication interfaces	
Wi-Fi	Peer-to-peer (ad hoc) or infrastructure (network)
SD Card	One card slot for removable SD memory cards

USB	
USB	• USB-A: Connect external USB device • USB Mini-B: Data transfer to and from PC / uncompressed colorized video
USB, standard	USB Mini-B: 2.0
USB, connector type	• USB-A connector • USB Mini-B connector

Composite video	
Video out	Composite
Video, standard	CVBS (ITU-R-BT.470 PAL/SMPTE 170M NTSC)
Video, connector type	4-pole 3.5 mm jack

Power system	
Battery type	Rechargeable Li ion battery
Battery voltage	3.7 V
Battery capacity	4.4 Ah, at +20°C to +25°C (+68°F to +77°F)
Battery operating time	Approx. 4 hours at +25°C (+77°F) ambient temperature and typical use
Charging system	In camera (AC adapter or 12 V from a vehicle) or 2-bay charger
Charging time	4 h to 90% capacity, charging status indicated by LED's
Charging temperature	0°C to +45°C (+32°F to +113°F)
Power management	Automatic shutdown and sleep mode (user selectable)
AC operation	AC adapter, 90–260 VAC input, 12 V output to camera
Start-up time from sleep mode	Instant on

Environmental data	
Operating temperature range	–15°C to +50°C (+5°F to +122°F)
Storage temperature range	–40°C to +70°C (–40°F to +158°F)
Humidity (operating and storage)	IEC 60068-2-30/24 h 95% relative humidity +25°C to +40°C (+77°F to +104°F) / 2 cycles
EMC	• EN 61000-6-2 (Immunity) • EN 61000-6-3 (Emission) • FCC 47 CFR Part 15 B (Emission)
Magnetic fields	EN 61 000-4-8, Test level 5 for continuous field (severe industrial environment)
Encapsulation	IP 54 (IEC 60529)
Shock	25 g (IEC 60068-2-27)
Vibration	2 g (IEC 60068-2-6)

Environmental data	
Drop	2 m (6.6 ft.)
Safety	EN/UL/CSA/PSE 60950-1

Physical data	
Camera weight, incl. battery	0.869 kg (1.91 lb.)
Camera size (L × W × H)	246 × 97 × 184 mm (9.7 × 3.8 × 7.2 in.)
Tripod mounting	UNC ¼"-20 (adapter needed)
Material	• Polycarbonate + acrylonitrile butadiene styrene (PC-ABS) • Thixomold magnesium • Thermoplastic elastomer (TPE)
Color	Graphite gray and black

Shipping information	
Packaging, type	Cardboard box
List of contents	• Hard transport case • Infrared camera with lens • Battery • FLIR ResearchIR Standard 4 • Handstrap • IR lens, f = 10 mm, 45° incl. case • Memory card • Power supply, incl. multi-plugs • Printed documentation • USB cable • Video cable
Packaging, weight	5.7 kg (12.6 lb.)
Packaging, size	630 × 190 × 370 mm (24.8 × 7.5 × 14.6 in.)
EAN-13	4743254001558
UPC-12	845188008932
Country of origin	Estonia

Supplies & accessories:

- 1196961; IR lens, f = 30 mm, 15° incl. case
- 1196960; IR lens, f = 10 mm, 45° incl. case
- T910814; Power supply, incl. multi plugs
- T911230ACC; Memory card SDHC 4 GB
- 1910423; USB cable Std A <-> Mini-B
- T198509; Cigarette lighter adapter kit, 12 VDC, 1.2 m/3.9 ft.
- 1910582ACC; Video cable
- T911093; Tool belt
- T198125; Battery charger, incl. power supply with multi plugs (Exx, Kxx)
- T199235; High-temperature lens
- T198113; IR lens, 76 mm (6°) with case and mounting support for Exx
- T198487; Li-Ion Battery pack 3.7V 17Wh
- T198484; Pouch for FLIR Exx series
- T198485; Sun shield
- T198341ACC; Transport case Exx
- T198486; Tripod Adapter
- T199363ACC; Battery Li-ion 3.6 V, 5.2 Ah, 19 Wh
- 19250-100; IR Window 2 in
- 19251-100; IR Window 3 in.
- 19252-100; IR Window 4 in.
- 19250-200; SS IR Window 2 in.
- 19251-200; SS IR Window 3 in.
- 19252-200; SS IR Window 4 in.

- T198586; FLIR Reporter Professional (license only)
- T198584; FLIR Tools
- T198583; FLIR Tools+ (download card incl. license key)
- DSW-10000; FLIR IR Camera Player
- T198697; FLIR ResearchIR Max + HSDR 4 (hardware sec. dev.)
- T199014; FLIR ResearchIR Max + HSDR 4 (printed license key)
- T199044; FLIR ResearchIR Max + HSDR 4 Upgrade (printed license key)
- T198696; FLIR ResearchIR Max 4 (hardware sec. dev.)
- T199013; FLIR ResearchIR Max 4 (printed license key)
- T199043; FLIR ResearchIR Max 4 Upgrade (printed license key)
- T198731; FLIR ResearchIR Standard 4 (hardware sec. dev.)
- T199012; FLIR ResearchIR Standard 4 (printed license key)
- T199042; FLIR ResearchIR Standard 4 Upgrade (printed license key)
- T199233; FLIR Atlas SDK for .NET
- T199234; FLIR Atlas SDK for MATLAB

23.8 FLIR E40 with SC kit (incl. Wi-Fi)

P/N: 64501-0114
Rev.: 35207

General description
The FLIR Exx series cameras are compact and rugged infrared cameras that can be used in harsh environments while still providing you with the latest technology such as a modern touch screen and wireless connectivity. A FLIR Exx series camera is the perfect choice when you are looking for a robust but feature-rich camera at an affordable price.
Benefits:
• Robust and sophisticated: The FLIR Exx series cameras have a robust and light-weight design and can withstand a 2 m drop. Large buttons combined with a modern touch screen and extensive measuring capabilities, they are the right choice for demanding inspections in the field. • Easy communication: The Wi-Fi connectivity of the FLIR Exx series cameras allows you to connect to smart phones and tablets, for the wireless transfer of images or the remote control of the camera. The Bluetooth-based METERLiNK function transfers readings from external measurement instruments to the infrared image. • Best value for money: The FLIR Exx series cameras combine good performance (up to 320 × 240 pixels), a user-friendly interface, and a rugged point-and-shoot design with an affordable price.

Imaging and optical data	
IR resolution	160 × 120 pixels
Thermal sensitivity/NETD	< 0.07°C @ +30°C (+86°F) / 70 mK
Field of view (FOV)	25° × 19°
Minimum focus distance	0.4 m (1.31 ft.)
Focal length	18 mm (0.7 in.)
Spatial resolution (IFOV)	2.72 mrad
F-number	1.3
Image frequency	60 Hz
Focus	Manual
Digital zoom	2×
Panning	Panning over zoomed-in images

Detector data	
Detector type	Focal plane array (FPA), uncooled microbolometer
Spectral range	7.5–13 µm

Image presentation	
Display	Touch screen, 3.5 in. LCD, 320 × 240 pixels
Image adjustment	Auto or manual

Image presentation modes	
Image modes	IR image, visual image, MSX, picture in picture, thumbnail gallery
Picture in Picture	IR area on visual image

Measurement	
Object temperature range	• –20°C to +120°C (–4°F to +248°F) • 0°C to +650°C (+32°F to +1202°F)
Accuracy	±2°C (±3.6°F) or ±2% of reading, for ambient temperature 10°C to 35°C (+50°F to 95°F)

Measurement analysis	
Spotmeter	3
Area	3 boxes with max./min./average
Automatic hot/cold detection	Auto hot or cold spotmeter markers within area
Difference temperature	Delta temperature between measurement functions or reference temperature
Reference temperature	Manually set or captured from any measurement function
Emissivity correction	Variable from 0.01 to 1.0 or selected from materials list
External optics/windows correction	Automatic, based on inputs of optics/window transmission and temperature
Measurement corrections	Reflected temperature, optics transmission and atmospheric transmission

Set-up	
Color palettes	Arctic, Gray, Iron, Lava, Rainbow and Rainbow HC
Set-up commands	Local adaptation of units, language, date and time formats

Storage of images	
Image storage	Standard JPEG, including measurement data, on memory card
Image storage mode	Simultaneous storage of images in IR, visual and MSX

Image annotations	
Text	Text from predefined list or soft keyboard on touch screen
Report generation	• FLIR Tools software specifically designed to provide an easy way to create inspection reports. It is available on the major platforms – Android, Windows, MacOS, and iOS.

Video recording in camera	
Non-radiometric IR video recording	MPEG-4 to memory card

Video streaming	
Radiometric IR video streaming	Full dynamic to PC using USB
Non-radiometric IR video streaming	Uncompressed colorized video using USB

Digital camera	
Built-in digital camera	3.1 Mpixels (2048 × 1536 pixels), and one LED light
Digital camera, focus	Fixed focus
Built-in digital lens data	FOV 53° × 41°
Digital camera, aspect ratio	4:3

Laser pointer	
Laser	Activated by dedicated button
Laser alignment	Position is automatic displayed on the IR image
Laser classification	Class 2
Laser type	Semiconductor AlGaInP diode laser

Laser pointer	
Laser power	1 mW
Laser wavelength	635 nm (red)

Data communication interfaces	
Wi-Fi	Peer-to-peer (ad hoc) or infrastructure (network)
SD Card	One card slot for removable SD memory cards

USB	
USB	• USB-A: Connect external USB device • USB Mini-B: Data transfer to and from PC / uncompressed colorized video
USB, standard	USB Mini-B: 2.0
USB, connector type	• USB-A connector • USB Mini-B connector

Composite video	
Video out	Composite
Video, standard	CVBS (ITU-R-BT.470 PAL/SMPTE 170M NTSC)
Video, connector type	4-pole 3.5 mm jack

Power system	
Battery type	Rechargeable Li ion battery
Battery voltage	3.7 V
Battery capacity	4.4 Ah, at +20°C to +25°C (+68°F to +77°F)
Battery operating time	Approx. 4 hours at +25°C (+77°F) ambient temperature and typical use
Charging system	In camera (AC adapter or 12 V from a vehicle) or 2-bay charger
Charging time	4 h to 90% capacity, charging status indicated by LED's
Charging temperature	0°C to +45°C (+32°F to +113°F)
Power management	Automatic shutdown and sleep mode (user selectable)
AC operation	AC adapter, 90–260 VAC input, 12 V output to camera
Start-up time from sleep mode	Instant on

Environmental data	
Operating temperature range	–15°C to +50°C (+5°F to +122°F)
Storage temperature range	–40°C to +70°C (–40°F to +158°F)
Humidity (operating and storage)	IEC 60068-2-30/24 h 95% relative humidity +25°C to +40°C (+77°F to +104°F) / 2 cycles
EMC	• EN 61000-6-2 (Immunity) • EN 61000-6-3 (Emission) • FCC 47 CFR Part 15 B (Emission)
Magnetic fields	EN 61 000-4-8, Test level 5 for continuous field (severe industrial environment)
Encapsulation	IP 54 (IEC 60529)
Shock	25 g (IEC 60068-2-27)
Vibration	2 g (IEC 60068-2-6)

Environmental data	
Drop	2 m (6.6 ft.)
Safety	EN/UL/CSA/PSE 60950-1

Physical data	
Camera weight, incl. battery	0.869 kg (1.91 lb.)
Camera size (L × W × H)	246 × 97 × 184 mm (9.7 × 3.8 × 7.2 in.)
Tripod mounting	UNC ¼"-20 (adapter needed)
Material	• Polycarbonate + acrylonitrile butadiene styrene (PC-ABS) • Thixomold magnesium • Thermoplastic elastomer (TPE)
Color	Graphite gray and black

Shipping information	
Packaging, type	Cardboard box
List of contents	• Hard transport case • Infrared camera with lens • Battery • FLIR ResearchIR Standard 4 • Handstrap • Memory card • Power supply, incl. multi-plugs • Printed documentation • USB cable • Video cable
Packaging, weight	5.7 kg (12.6 lb.)
Packaging, size	630 × 190 × 370 mm (24.8 × 7.5 × 14.6 in.)
EAN-13	4743254002043
UPC-12	845188011208
Country of origin	Estonia

Supplies & accessories:

- 1196961; IR lens, f = 30 mm, 15° incl. case
- 1196960; IR lens, f = 10 mm, 45° incl. case
- T910814; Power supply, incl. multi plugs
- T911230ACC; Memory card SDHC 4 GB
- 1910423; USB cable Std A <-> Mini-B
- T198509; Cigarette lighter adapter kit, 12 VDC, 1.2 m/3.9 ft.
- 1910582ACC; Video cable
- T911093; Tool belt
- T198125; Battery charger, incl. power supply with multi plugs (Exx, Kxx)
- T199235; High-temperature lens
- T198113; IR lens, 76 mm (6°) with case and mounting support for Exx
- T198487; Li-Ion Battery pack 3.7V 17Wh
- T198484; Pouch for FLIR Exx series
- T198485; Sun shield
- T198341ACC; Transport case Exx
- T198486; Tripod Adapter
- T199363ACC; Battery Li-ion 3.6 V, 5.2 Ah, 19 Wh
- 19250-100; IR Window 2 in
- 19251-100; IR Window 3 in.
- 19252-100; IR Window 4 in.
- 19250-200; SS IR Window 2 in.
- 19251-200; SS IR Window 3 in.
- 19252-200; SS IR Window 4 in.

- T198586; FLIR Reporter Professional (license only)
- T198584; FLIR Tools
- T198583; FLIR Tools+ (download card incl. license key)
- DSW-10000; FLIR IR Camera Player
- T198697; FLIR ResearchIR Max + HSDR 4 (hardware sec. dev.)
- T199014; FLIR ResearchIR Max + HSDR 4 (printed license key)
- T199044; FLIR ResearchIR Max + HSDR 4 Upgrade (printed license key)
- T198696; FLIR ResearchIR Max 4 (hardware sec. dev.)
- T199013; FLIR ResearchIR Max 4 (printed license key)
- T199043; FLIR ResearchIR Max 4 Upgrade (printed license key)
- T198731; FLIR ResearchIR Standard 4 (hardware sec. dev.)
- T199012; FLIR ResearchIR Standard 4 (printed license key)
- T199042; FLIR ResearchIR Standard 4 Upgrade (printed license key)
- T199233; FLIR Atlas SDK for .NET
- T199234; FLIR Atlas SDK for MATLAB

23.9 FLIR E40bx (incl. Wi-Fi)

P/N: 64501-0501
Rev.: 37541

General description
The FLIR Exx series cameras are compact and rugged infrared cameras that can be used in harsh environments while still providing you with the latest technology such as a modern touch screen and wireless connectivity. A FLIR Exx series camera is the perfect choice when you are looking for a robust but feature-rich camera at an affordable price.
Benefits:
• Robust and sophisticated: The FLIR Exx series cameras have a robust and light-weight design and can withstand a 2 m drop. Large buttons combined with a modern touch screen and extensive measuring capabilities, they are the right choice for demanding inspections in the field. • Easy communication: The Wi-Fi connectivity of the FLIR Exx series cameras allows you to connect to smart phones and tablets, for the wireless transfer of images or the remote control of the camera. The Bluetooth-based METERLiNK function transfers readings from external measurement instruments to the infrared image. • Best value for money: The FLIR Exx series cameras combine good performance (up to 320 × 240 pixels), a user-friendly interface, and a rugged point-and-shoot design with an affordable price.

Imaging and optical data	
IR resolution	160 × 120 pixels
Thermal sensitivity/NETD	< 0.045°C @ +30°C (+86°F) / 45 mK
Field of view (FOV)	25° × 19°
Minimum focus distance	0.4 m (1.31 ft.)
Focal length	18 mm (0.7 in.)
Spatial resolution (IFOV)	2.72 mrad
F-number	1.3
Image frequency	60 Hz
Focus	Manual
Digital zoom	2×
Panning	Panning over zoomed-in images

Detector data	
Detector type	Focal plane array (FPA), uncooled microbolometer
Spectral range	7.5–13 µm

Image presentation	
Display	Touch screen, 3.5 in. LCD, 320 × 240 pixels
Image adjustment	Auto or manual

Image presentation modes	
Image modes	IR image, visual image, MSX, picture in picture, thumbnail gallery
Picture in Picture	IR area on visual image

Measurement	
Object temperature range	–20°C to +120°C (–4°F to +248°F)
Accuracy	±2°C (±3.6°F) or ±2% of reading, for ambient temperature 10°C to 35°C (+50°F to 95°F)

Measurement analysis	
Spotmeter	3
Area	3 boxes with max./min./average

Measurement analysis	
Automatic hot/cold detection	Auto hot or cold spotmeter markers within area
Difference temperature	Delta temperature between measurement functions or reference temperature
Emissivity correction	Variable from 0.01 to 1.0 or selected from materials list
Measurement corrections	Reflected temperature, optics transmission and atmospheric transmission

Alarm	
Screening	Yes
Humidity alarm	1 humidity alarm, including dew point alarm
Insulation alarm	1 insulation alarm

Set-up	
Color palettes	Arctic, Gray, Iron, Lava, Rainbow and Rainbow HC
Set-up commands	Local adaptation of units, language, date and time formats

Storage of images	
Image storage	Standard JPEG, including measurement data, on memory card
Image storage mode	Simultaneous storage of images in IR, visual and MSX

Image annotations	
Voice	60 seconds (via Bluetooth)
Text	Text from predefined list or soft keyboard on touch screen
METERLiNK	Wireless connection (Bluetooth) to: FLIR meters with METERLiNK
Report generation	• FLIR Tools software specifically designed to provide an easy way to create inspection reports. It is available on the major platforms – Android, Windows, MacOS, and iOS.

Video recording in camera	
Non-radiometric IR video recording	MPEG-4 to memory card

Video streaming	
Radiometric IR video streaming	Full dynamic to PC using USB
Non-radiometric IR video streaming	Uncompressed colorized video using USB

Digital camera	
Built-in digital camera	3.1 Mpixels (2048 × 1536 pixels), and one LED light
Digital camera, focus	Fixed focus
Built-in digital lens data	FOV 53° × 41°
Digital camera, aspect ratio	4:3

Laser pointer	
Laser	Activated by dedicated button
Laser alignment	Position is automatic displayed on the IR image
Laser classification	Class 2

Laser pointer	
Laser type	Semiconductor AlGaInP diode laser
Laser power	1 mW
Laser wavelength	635 nm (red)

Data communication interfaces	
Wi-Fi	Peer to peer (ad hoc) or infrastructure (network)
SD Card	One card slot for removable SD memory cards
Audio	Microphone headset via Bluetooth for voice annotation of images

USB	
USB	• USB-A: Connect external USB device • USB Mini-B: Data transfer to and from PC / uncompressed colorized video
USB, standard	USB Mini-B: 2.0
USB, connector type	• USB-A connector • USB Mini-B connector

Composite video	
Video out	Composite
Video, standard	CVBS (ITU-R-BT.470 PAL/SMPTE 170M NTSC)
Video, connector type	4-pole 3.5 mm jack

Radio	
Wi-Fi	• Standard: 802.11 b/g • Frequency range: 2412–2462 MHz • Max. output power: 15 dBm
Bluetooth	Frequency range: 2402–2480 MHz
Antenna	Internal

Power system	
Battery type	Rechargeable Li ion battery
Battery voltage	3.7 V
Battery capacity	4.4 Ah, at +20°C to +25°C (+68°F to +77°F)
Battery operating time	Approx. 4 hours at +25°C (+77°F) ambient temperature and typical use
Charging system	In camera (AC adapter or 12 V from a vehicle) or 2-bay charger
Charging time	4 h to 90% capacity, charging status indicated by LED's
Charging temperature	0°C to +45°C (+32°F to +113°F)
Power management	Automatic shutdown and sleep mode (user selectable)
AC operation	AC adapter, 90–260 VAC input, 12 V output to camera
Start-up time from sleep mode	Instant on

Environmental data	
Operating temperature range	–15°C to +50°C (+5°F to +122°F)
Storage temperature range	–40°C to +70°C (–40°F to +158°F)
Humidity (operating and storage)	IEC 60068-2-30/24 h 95% relative humidity +25°C to +40°C (+77°F to +104°F) / 2 cycles

Environmental data	
EMC	• ETSI EN 301 489-1 (radio) • ETSI EN 301 489-17 • EN 61000-6-2 (Immunity) • EN 61000-6-3 (Emission) • FCC 47 CFR Part 15 B (Emission) • ICES-003
Radio spectrum	• ETSI EN 300 328 • FCC Part 15.247 • RSS-210
Magnetic fields	EN 61 000-4-8, Test level 5 for continuous field (severe industrial environment)
Encapsulation	IP 54 (IEC 60529)
Shock	25 g (IEC 60068-2-27)
Vibration	2 g (IEC 60068-2-6)
Drop	2 m (6.6 ft.)
Safety	EN/UL/CSA/PSE 60950-1

Physical data	
Camera weight, incl. battery	0.869 kg (1.91 lb.)
Camera size (L × W × H)	246 × 97 × 184 mm (9.7 × 3.8 × 7.2 in.)
Tripod mounting	UNC ¼"-20 (adapter needed)
Material	• Polycarbonate + acrylonitrile butadiene styrene (PC-ABS) • Thixomold magnesium • Thermoplastic elastomer (TPE)
Color	Graphite gray and black

Shipping information	
Packaging, type	Cardboard box
List of contents	• Hard transport case • Infrared camera with lens • Battery • Handstrap • Memory card • Power supply, incl. multi-plugs • Printed documentation • USB cable • Video cable
Packaging, weight	5.2 kg (11.5 lb.)
Packaging, size	500 × 190 × 370 mm (19.7 × 7.5 × 14.6 in.)
EAN-13	4743254001176
UPC-12	845188005207
Country of origin	Estonia

Supplies & accessories:

- 1196961; IR lens, f = 30 mm, 15° incl. case
- 1196960; IR lens, f = 10 mm, 45° incl. case
- T910814; Power supply, incl. multi plugs
- T911230ACC; Memory card SDHC 4 GB
- 1910423; USB cable Std A <-> Mini-B
- T198509; Cigarette lighter adapter kit, 12 VDC, 1.2 m/3.9 ft.
- 1910582ACC; Video cable
- T197771ACC; Bluetooth Headset
- T911093; Tool belt

- T198125; Battery charger, incl. power supply with multi plugs (Exx, Kxx)
- T199235; High-temperature lens
- T198113; IR lens, 76 mm (6°) with case and mounting support for Exx
- T198487; Li-Ion Battery pack 3.7V 17Wh
- T198484; Pouch for FLIR Exx series
- T198485; Sun shield
- T198341ACC; Transport case Exx
- T198486; Tripod Adapter
- T199363ACC; Battery Li-ion 3.6 V, 5.2 Ah, 19 Wh
- 19250-100; IR Window 2 in
- 19251-100; IR Window 3 in.
- 19252-100; IR Window 4 in.
- 19250-200; SS IR Window 2 in.
- 19251-200; SS IR Window 3 in.
- 19252-200; SS IR Window 4 in.
- T198586; FLIR Reporter Professional (license only)
- T198584; FLIR Tools
- T198583; FLIR Tools+ (download card incl. license key)
- DSW-10000; FLIR IR Camera Player
- APP-10002; FLIR Tools Mobile (Android Application)
- APP-10004; FLIR Tools (MacOS Application)
- T198697; FLIR ResearchIR Max + HSDR 4 (hardware sec. dev.)
- T199014; FLIR ResearchIR Max + HSDR 4 (printed license key)
- T199044; FLIR ResearchIR Max + HSDR 4 Upgrade (printed license key)
- T198696; FLIR ResearchIR Max 4 (hardware sec. dev.)
- T199013; FLIR ResearchIR Max 4 (printed license key)
- T199043; FLIR ResearchIR Max 4 Upgrade (printed license key)
- T198731; FLIR ResearchIR Standard 4 (hardware sec. dev.)
- T199012; FLIR ResearchIR Standard 4 (printed license key)
- T199042; FLIR ResearchIR Standard 4 Upgrade (printed license key)
- T199233; FLIR Atlas SDK for .NET
- T199234; FLIR Atlas SDK for MATLAB

23.10 FLIR E50

P/N: 64502-1101
Rev.: 35207

General description
The FLIR Exx series cameras are compact and rugged infrared cameras that can be used in harsh environments while still providing you with the latest technology such as a modern touch screen. A FLIR Exx series camera is the perfect choice when you are looking for a robust but feature-rich camera at an affordable price.
Benefits:
• Robust and sophisticated: The FLIR Exx series cameras have a robust and light-weight design and can withstand a 2 m drop. Large buttons combined with a modern touch screen and extensive measuring capabilities, they are the right choice for demanding inspections in the field. • Best value for money: The FLIR Exx series cameras combine good performance (up to 320 × 240 pixels), a user-friendly interface, and a rugged point-and-shoot design with an affordable price.

Imaging and optical data	
IR resolution	240 × 180 pixels
Thermal sensitivity/NETD	< 0.05°C @ +30°C (+86°F) / 50 mK
Field of view (FOV)	25° × 19°
Minimum focus distance	0.4 m (1.31 ft.)
Focal length	18 mm (0.7 in.)
Spatial resolution (IFOV)	1.82 mrad
F-number	1.3
Image frequency	60 Hz
Focus	Manual
Digital zoom	2× and 4×
Panning	Panning over zoomed-in images

Detector data	
Detector type	Focal plane array (FPA), uncooled microbolometer
Spectral range	7.5–13 µm

Image presentation	
Display	Touch screen, 3.5 in. LCD, 320 × 240 pixels
Image adjustment	Auto or manual

Image presentation modes	
Image modes	IR image, visual image, MSX, picture in picture, thumbnail gallery
Picture in Picture	Scalable IR area on visual image

Measurement	
Object temperature range	• –20°C to +120°C (–4°F to +248°F) • 0°C to +650°C (+32°F to +1202°F)
Accuracy	±2°C (±3.6°F) or ±2% of reading, for ambient temperature 10°C to 35°C (+50°F to 95°F)

Measurement analysis	
Spotmeter	3
Area	3 boxes with max./min./average
Automatic hot/cold detection	Auto hot or cold spotmeter markers within area

Measurement analysis	
Difference temperature	Delta temperature between measurement functions or reference temperature
Reference temperature	Manually set or captured from any measurement function
Emissivity correction	Variable from 0.01 to 1.0 or selected from materials list
External optics/windows correction	Automatic, based on inputs of optics/window transmission and temperature
Measurement corrections	Reflected temperature, optics transmission and atmospheric transmission

Set-up	
Color palettes	Arctic, Gray, Iron, Lava, Rainbow and Rainbow HC
Set-up commands	Local adaptation of units, language, date and time formats

Storage of images	
Image storage	Standard JPEG, including measurement data, on memory card
Image storage mode	Simultaneous storage of images in IR, visual and MSX

Image annotations	
Text	Text from predefined list or soft keyboard on touch screen
Report generation	• FLIR Tools software specifically designed to provide an easy way to create inspection reports. It is available on the major platforms – Android, Windows, MacOS, and iOS.

Video recording in camera	
Non-radiometric IR video recording	MPEG-4 to memory card

Video streaming	
Radiometric IR video streaming	Full dynamic to PC using USB
Non-radiometric IR video streaming	Uncompressed colorized video using USB

Digital camera	
Built-in digital camera	3.1 Mpixels (2048 × 1536 pixels), and one LED light
Digital camera, focus	Fixed focus
Built-in digital lens data	FOV 53° × 41°
Digital camera, aspect ratio	4:3

Laser pointer	
Laser	Activated by dedicated button
Laser alignment	Position is automatic displayed on the IR image
Laser classification	Class 2
Laser type	Semiconductor AlGaInP diode laser
Laser power	1 mW
Laser wavelength	635 nm (red)

Data communication interfaces	
SD Card	One card slot for removable SD memory cards

USB	
USB	• USB-A: Connect external USB device • USB Mini-B: Data transfer to and from PC / uncompressed colorized video
USB, standard	USB Mini-B: 2.0
USB, connector type	• USB-A connector • USB Mini-B connector

Composite video	
Video out	Composite
Video, standard	CVBS (ITU-R-BT.470 PAL/SMPTE 170M NTSC)
Video, connector type	4-pole 3.5 mm jack

Power system	
Battery type	Rechargeable Li ion battery
Battery voltage	3.7 V
Battery capacity	4.4 Ah, at +20°C to +25°C (+68°F to +77°F)
Battery operating time	Approx. 4 hours at +25°C (+77°F) ambient temperature and typical use
Charging system	In camera (AC adapter or 12 V from a vehicle) or 2-bay charger
Charging time	4 h to 90% capacity, charging status indicated by LED's
Charging temperature	0°C to +45°C (+32°F to +113°F)
Power management	Automatic shutdown and sleep mode (user selectable)
AC operation	AC adapter, 90–260 VAC input, 12 V output to camera
Start-up time from sleep mode	Instant on

Environmental data	
Operating temperature range	–15°C to +50°C (+5°F to +122°F)
Storage temperature range	–40°C to +70°C (–40°F to +158°F)
Humidity (operating and storage)	IEC 60068-2-30/24 h 95% relative humidity +25°C to +40°C (+77°F to +104°F) / 2 cycles
EMC	• EN 61000-6-2 (Immunity) • EN 61000-6-3 (Emission) • FCC 47 CFR Part 15 B (Emission)
Magnetic fields	EN 61 000-4-8, Test level 5 for continuous field (severe industrial environment)
Encapsulation	IP 54 (IEC 60529)
Shock	25 g (IEC 60068-2-27)
Vibration	2 g (IEC 60068-2-6)
Drop	2 m (6.6 ft.)
Safety	EN/UL/CSA/PSE 60950-1

Physical data	
Camera weight, incl. battery	0.869 kg (1.91 lb.)
Camera size (L × W × H)	246 × 97 × 184 mm (9.7 × 3.8 × 7.2 in.)
Tripod mounting	UNC ¼"-20 (adapter needed)

Physical data	
Material	• Polycarbonate + acrylonitrile butadiene styrene (PC-ABS) • Thixomold magnesium • Thermoplastic elastomer (TPE)
Color	Graphite gray and black

Shipping information	
Packaging, type	Cardboard box
List of contents	• Hard transport case • Infrared camera with lens • Battery • Handstrap • Memory card • Power supply, incl. multi-plugs • Printed documentation • USB cable • Video cable
Packaging, weight	5.2 kg (11.5 lb.)
Packaging, size	500 × 190 × 370 mm (19.7 × 7.5 × 14.6 in.)
EAN-13	4743254001237
UPC-12	845188005269
Country of origin	Estonia

Supplies & accessories:

- 1196961; IR lens, f = 30 mm, 15° incl. case
- 1196960; IR lens, f = 10 mm, 45° incl. case
- T910814; Power supply, incl. multi plugs
- T911230ACC; Memory card SDHC 4 GB
- 1910423; USB cable Std A <-> Mini-B
- T198509; Cigarette lighter adapter kit, 12 VDC, 1.2 m/3.9 ft.
- 1910582ACC; Video cable
- T911093; Tool belt
- T198125; Battery charger, incl. power supply with multi plugs (Exx, Kxx)
- T199235; High-temperature lens
- T198113; IR lens, 76 mm (6°) with case and mounting support for Exx
- T198487; Li-Ion Battery pack 3.7V 17Wh
- T198484; Pouch for FLIR Exx series
- T198485; Sun shield
- T198341ACC; Transport case Exx
- T198486; Tripod Adapter
- T199363ACC; Battery Li-ion 3.6 V, 5.2 Ah, 19 Wh
- 19250-100; IR Window 2 in
- 19251-100; IR Window 3 in.
- 19252-100; IR Window 4 in.
- 19250-200; SS IR Window 2 in.
- 19251-200; SS IR Window 3 in.
- 19252-200; SS IR Window 4 in.
- T198586; FLIR Reporter Professional (license only)
- T198584; FLIR Tools
- T198583; FLIR Tools+ (download card incl. license key)
- DSW-10000; FLIR IR Camera Player
- T198697; FLIR ResearchIR Max + HSDR 4 (hardware sec. dev.)
- T199014; FLIR ResearchIR Max + HSDR 4 (printed license key)
- T199044; FLIR ResearchIR Max + HSDR 4 Upgrade (printed license key)
- T198696; FLIR ResearchIR Max 4 (hardware sec. dev.)
- T199013; FLIR ResearchIR Max 4 (printed license key)
- T199043; FLIR ResearchIR Max 4 Upgrade (printed license key)

- T198731; FLIR ResearchIR Standard 4 (hardware sec. dev.)
- T199012; FLIR ResearchIR Standard 4 (printed license key)
- T199042; FLIR ResearchIR Standard 4 Upgrade (printed license key)
- T199233; FLIR Atlas SDK for .NET
- T199234; FLIR Atlas SDK for MATLAB

23.11 FLIR E50 (incl. Wi-Fi)

P/N: 64501-0201
Rev.: 35207

General description
The FLIR Exx series cameras are compact and rugged infrared cameras that can be used in harsh environments while still providing you with the latest technology such as a modern touch screen and wireless connectivity. A FLIR Exx series camera is the perfect choice when you are looking for a robust but feature-rich camera at an affordable price.
Benefits:
• Robust and sophisticated: The FLIR Exx series cameras have a robust and light-weight design and can withstand a 2 m drop. Large buttons combined with a modern touch screen and extensive measuring capabilities, they are the right choice for demanding inspections in the field. • Easy communication: The Wi-Fi connectivity of the FLIR Exx series cameras allows you to connect to smart phones and tablets, for the wireless transfer of images or the remote control of the camera. The Bluetooth-based METERLiNK function transfers readings from external measurement instruments to the infrared image. • Best value for money: The FLIR Exx series cameras combine good performance (up to 320 × 240 pixels), a user-friendly interface, and a rugged point-and-shoot design with an affordable price.

Imaging and optical data	
IR resolution	240 × 180 pixels
Thermal sensitivity/NETD	< 0.05°C @ +30°C (+86°F) / 50 mK
Field of view (FOV)	25° × 19°
Minimum focus distance	0.4 m (1.31 ft.)
Focal length	18 mm (0.7 in.)
Spatial resolution (IFOV)	1.82 mrad
F-number	1.3
Image frequency	60 Hz
Focus	Manual
Digital zoom	2× and 4×
Panning	Panning over zoomed-in images

Detector data	
Detector type	Focal plane array (FPA), uncooled microbolometer
Spectral range	7.5–13 µm

Image presentation	
Display	Touch screen, 3.5 in. LCD, 320 × 240 pixels
Image adjustment	Auto or manual

Image presentation modes	
Image modes	IR image, visual image, MSX, picture in picture, thumbnail gallery
Picture in Picture	Scalable IR area on visual image

Measurement	
Object temperature range	• –20°C to +120°C (–4°F to +248°F) • 0°C to +650°C (+32°F to +1202°F)
Accuracy	±2°C (±3.6°F) or ±2% of reading, for ambient temperature 10°C to 35°C (+50°F to 95°F)

Measurement analysis	
Spotmeter	3
Area	3 boxes with max./min./average
Automatic hot/cold detection	Auto hot or cold spotmeter markers within area
Difference temperature	Delta temperature between measurement functions or reference temperature
Reference temperature	Manually set or captured from any measurement function
Emissivity correction	Variable from 0.01 to 1.0 or selected from materials list
External optics/windows correction	Automatic, based on inputs of optics/window transmission and temperature
Measurement corrections	Reflected temperature, optics transmission and atmospheric transmission

Set-up	
Color palettes	Arctic, Gray, Iron, Lava, Rainbow and Rainbow HC
Set-up commands	Local adaptation of units, language, date and time formats

Storage of images	
Image storage	Standard JPEG, including measurement data, on memory card
Image storage mode	Simultaneous storage of images in IR, visual and MSX

Image annotations	
Voice	60 seconds (via Bluetooth)
Text	Text from predefined list or soft keyboard on touch screen
METERLiNK	Wireless connection (Bluetooth) to: FLIR meters with METERLiNK
Report generation	• FLIR Tools software specifically designed to provide an easy way to create inspection reports. It is available on the major platforms – Android, Windows, MacOS, and iOS.

Video recording in camera	
Non-radiometric IR video recording	MPEG-4 to memory card

Video streaming	
Radiometric IR video streaming	Full dynamic to PC using USB
Non-radiometric IR video streaming	Uncompressed colorized video using USB

Digital camera	
Built-in digital camera	3.1 Mpixels (2048 × 1536 pixels), and one LED light
Digital camera, focus	Fixed focus
Built-in digital lens data	FOV 53° × 41°
Digital camera, aspect ratio	4:3

Laser pointer	
Laser	Activated by dedicated button
Laser alignment	Position is automatic displayed on the IR image

Laser pointer	
Laser classification	Class 2
Laser type	Semiconductor AlGaInP diode laser
Laser power	1 mW
Laser wavelength	635 nm (red)

Data communication interfaces	
Wi-Fi	Peer to peer (ad hoc) or infrastructure (network)
SD Card	One card slot for removable SD memory cards
Audio	Microphone headset via Bluetooth for voice annotation of images

USB	
USB	• USB-A: Connect external USB device • USB Mini-B: Data transfer to and from PC / uncompressed colorized video
USB, standard	USB Mini-B: 2.0
USB, connector type	• USB-A connector • USB Mini-B connector

Composite video	
Video out	Composite
Video, standard	CVBS (ITU-R-BT.470 PAL/SMPTE 170M NTSC)
Video, connector type	4-pole 3.5 mm jack

Radio	
Wi-Fi	• Standard: 802.11 b/g • Frequency range: 2412–2462 MHz • Max. output power: 15 dBm
Bluetooth	Frequency range: 2402–2480 MHz
Antenna	Internal

Power system	
Battery type	Rechargeable Li ion battery
Battery voltage	3.7 V
Battery capacity	4.4 Ah, at +20°C to +25°C (+68°F to +77°F)
Battery operating time	Approx. 4 hours at +25°C (+77°F) ambient temperature and typical use
Charging system	In camera (AC adapter or 12 V from a vehicle) or 2-bay charger
Charging time	4 h to 90% capacity, charging status indicated by LED's
Charging temperature	0°C to +45°C (+32°F to +113°F)
Power management	Automatic shutdown and sleep mode (user selectable)
AC operation	AC adapter, 90–260 VAC input, 12 V output to camera
Start-up time from sleep mode	Instant on

Environmental data	
Operating temperature range	–15°C to +50°C (+5°F to +122°F)
Storage temperature range	–40°C to +70°C (–40°F to +158°F)

Environmental data	
Humidity (operating and storage)	IEC 60068-2-30/24 h 95% relative humidity +25°C to +40°C (+77°F to +104°F) / 2 cycles
EMC	• ETSI EN 301 489-1 (radio) • ETSI EN 301 489-17 • EN 61000-6-2 (Immunity) • EN 61000-6-3 (Emission) • FCC 47 CFR Part 15 B (Emission) • ICES-003
Radio spectrum	• ETSI EN 300 328 • FCC Part 15.247 • RSS-210
Magnetic fields	EN 61 000-4-8, Test level 5 for continuous field (severe industrial environment)
Encapsulation	IP 54 (IEC 60529)
Shock	25 g (IEC 60068-2-27)
Vibration	2 g (IEC 60068-2-6)
Drop	2 m (6.6 ft.)
Safety	EN/UL/CSA/PSE 60950-1

Physical data	
Camera weight, incl. battery	0.869 kg (1.91 lb.)
Camera size (L × W × H)	246 × 97 × 184 mm (9.7 × 3.8 × 7.2 in.)
Tripod mounting	UNC ¼"-20 (adapter needed)
Material	• Polycarbonate + acrylonitrile butadiene styrene (PC-ABS) • Thixomold magnesium • Thermoplastic elastomer (TPE)
Color	Graphite gray and black

Shipping information	
Packaging, type	Cardboard box
List of contents	• Hard transport case • Infrared camera with lens • Battery • Handstrap • Memory card • Power supply, incl. multi-plugs • Printed documentation • USB cable • Video cable
Packaging, weight	5.2 kg (11.5 lb.)
Packaging, size	500 × 190 × 370 mm (19.7 × 7.5 × 14.6 in.)
EAN-13	4743254001145
UPC-12	845188005177
Country of origin	Estonia

Supplies & accessories:

- 1196961; IR lens, f = 30 mm, 15° incl. case
- 1196960; IR lens, f = 10 mm, 45° incl. case
- T910814; Power supply, incl. multi plugs
- T911230ACC; Memory card SDHC 4 GB
- 1910423; USB cable Std A <-> Mini-B
- T198509; Cigarette lighter adapter kit, 12 VDC, 1.2 m/3.9 ft.
- 1910582ACC; Video cable

- T197771ACC; Bluetooth Headset
- T911093; Tool belt
- T198125; Battery charger, incl. power supply with multi plugs (Exx, Kxx)
- T199235; High-temperature lens
- T198113; IR lens, 76 mm (6°) with case and mounting support for Exx
- T198487; Li-Ion Battery pack 3.7V 17Wh
- T198484; Pouch for FLIR Exx series
- T198485; Sun shield
- T198341ACC; Transport case Exx
- T198486; Tripod Adapter
- T199363ACC; Battery Li-ion 3.6 V, 5.2 Ah, 19 Wh
- 19250-100; IR Window 2 in
- 19251-100; IR Window 3 in.
- 19252-100; IR Window 4 in.
- 19250-200; SS IR Window 2 in.
- 19251-200; SS IR Window 3 in.
- 19252-200; SS IR Window 4 in.
- T198586; FLIR Reporter Professional (license only)
- T198584; FLIR Tools
- T198583; FLIR Tools+ (download card incl. license key)
- DSW-10000; FLIR IR Camera Player
- APP-10002; FLIR Tools Mobile (Android Application)
- APP-10004; FLIR Tools (MacOS Application)
- T198697; FLIR ResearchIR Max + HSDR 4 (hardware sec. dev.)
- T199014; FLIR ResearchIR Max + HSDR 4 (printed license key)
- T199044; FLIR ResearchIR Max + HSDR 4 Upgrade (printed license key)
- T198696; FLIR ResearchIR Max 4 (hardware sec. dev.)
- T199013; FLIR ResearchIR Max 4 (printed license key)
- T199043; FLIR ResearchIR Max 4 Upgrade (printed license key)
- T198731; FLIR ResearchIR Standard 4 (hardware sec. dev.)
- T199012; FLIR ResearchIR Standard 4 (printed license key)
- T199042; FLIR ResearchIR Standard 4 Upgrade (printed license key)
- T199233; FLIR Atlas SDK for .NET
- T199234; FLIR Atlas SDK for MATLAB

23.12 FLIR E50bx (incl. Wi-Fi)

P/N: 64501-0601
Rev.: 37542

General description
The FLIR Exx series cameras are compact and rugged infrared cameras that can be used in harsh environments while still providing you with the latest technology such as a modern touch screen and wireless connectivity. A FLIR Exx series camera is the perfect choice when you are looking for a robust but feature-rich camera at an affordable price.
Benefits:
• Robust and sophisticated: The FLIR Exx series cameras have a robust and light-weight design and can withstand a 2 m drop. Large buttons combined with a modern touch screen and extensive measuring capabilities, they are the right choice for demanding inspections in the field. • Easy communication: The Wi-Fi connectivity of the FLIR Exx series cameras allows you to connect to smart phones and tablets, for the wireless transfer of images or the remote control of the camera. The Bluetooth-based METERLiNK function transfers readings from external measurement instruments to the infrared image. • Best value for money: The FLIR Exx series cameras combine good performance (up to 320 × 240 pixels), a user-friendly interface, and a rugged point-and-shoot design with an affordable price.

Imaging and optical data	
IR resolution	240 × 180 pixels
Thermal sensitivity/NETD	< 0.045°C @ +30°C (+86°F) / 45 mK
Field of view (FOV)	25° × 19°
Minimum focus distance	0.4 m (1.31 ft.)
Focal length	18 mm (0.7 in.)
Spatial resolution (IFOV)	1.82 mrad
F-number	1.3
Image frequency	60 Hz
Focus	Manual
Digital zoom	2× and 4×
Panning	Panning over zoomed-in images

Detector data	
Detector type	Focal plane array (FPA), uncooled microbolometer
Spectral range	7.5–13 µm

Image presentation	
Display	Touch screen, 3.5 in. LCD, 320 × 240 pixels
Image adjustment	Auto or manual

Image presentation modes	
Image modes	IR image, visual image, MSX, picture in picture, thumbnail gallery
Picture in Picture	Scalable IR area on visual image

Measurement	
Object temperature range	–20°C to +120°C (–4°F to +248°F)
Accuracy	±2°C (±3.6°F) or ±2% of reading, for ambient temperature 10°C to 35°C (+50°F to 95°F)

Measurement analysis	
Spotmeter	3
Area	3 boxes with max./min./average

Measurement analysis	
Automatic hot/cold detection	Auto hot or cold spotmeter markers within area
Difference temperature	Delta temperature between measurement functions or reference temperature
Reference temperature	Manually set or captured from any measurement function
Emissivity correction	Variable from 0.01 to 1.0 or selected from materials list
Measurement corrections	Reflected temperature, optics transmission and atmospheric transmission

Alarm	
Screening	Yes
Humidity alarm	1 humidity alarm, including dew point alarm
Insulation alarm	1 insulation alarm

Set-up	
Color palettes	Arctic, Gray, Iron, Lava, Rainbow and Rainbow HC
Set-up commands	Local adaptation of units, language, date and time formats

Storage of images	
Image storage	Standard JPEG, including measurement data, on memory card
Image storage mode	Simultaneous storage of images in IR, visual and MSX

Image annotations	
Voice	60 seconds (via Bluetooth)
Text	Text from predefined list or soft keyboard on touch screen
METERLiNK	Wireless connection (Bluetooth) to: FLIR meters with METERLiNK
Report generation	• FLIR Tools software specifically designed to provide an easy way to create inspection reports. It is available on the major platforms – Android, Windows, MacOS, and iOS.

Video recording in camera	
Non-radiometric IR video recording	MPEG-4 to memory card

Video streaming	
Radiometric IR video streaming	Full dynamic to PC using USB
Non-radiometric IR video streaming	Uncompressed colorized video using USB

Digital camera	
Built-in digital camera	3.1 Mpixels (2048 × 1536 pixels), and one LED light
Digital camera, focus	Fixed focus
Built-in digital lens data	FOV 53° × 41°
Digital camera, aspect ratio	4:3

Laser pointer	
Laser	Activated by dedicated button
Laser alignment	Position is automatic displayed on the IR image
Laser classification	Class 2
Laser type	Semiconductor AlGaInP diode laser
Laser power	1 mW
Laser wavelength	635 nm (red)

Data communication interfaces	
Wi-Fi	Peer to peer (ad hoc) or infrastructure (network)
SD Card	One card slot for removable SD memory cards
Audio	Microphone headset via Bluetooth for voice annotation of images

USB	
USB	• USB-A: Connect external USB device • USB Mini-B: Data transfer to and from PC / uncompressed colorized video
USB, standard	USB Mini-B: 2.0
USB, connector type	• USB-A connector • USB Mini-B connector

Composite video	
Video out	Composite
Video, standard	CVBS (ITU-R-BT.470 PAL/SMPTE 170M NTSC)
Video, connector type	4-pole 3.5 mm jack

Radio	
Wi-Fi	• Standard: 802.11 b/g • Frequency range: 2412–2462 MHz • Max. output power: 15 dBm
Bluetooth	Frequency range: 2402–2480 MHz
Antenna	Internal

Power system	
Battery type	Rechargeable Li ion battery
Battery voltage	3.7 V
Battery capacity	4.4 Ah, at +20°C to +25°C (+68°F to +77°F)
Battery operating time	Approx. 4 hours at +25°C (+77°F) ambient temperature and typical use
Charging system	In camera (AC adapter or 12 V from a vehicle) or 2-bay charger
Charging time	4 h to 90% capacity, charging status indicated by LED's
Charging temperature	0°C to +45°C (+32°F to +113°F)
Power management	Automatic shutdown and sleep mode (user selectable)
AC operation	AC adapter, 90–260 VAC input, 12 V output to camera
Start-up time from sleep mode	Instant on

Environmental data	
Operating temperature range	–15°C to +50°C (+5°F to +122°F)
Storage temperature range	–40°C to +70°C (–40°F to +158°F)
Humidity (operating and storage)	IEC 60068-2-30/24 h 95% relative humidity +25°C to +40°C (+77°F to +104°F) / 2 cycles
EMC	• ETSI EN 301 489-1 (radio) • ETSI EN 301 489-17 • EN 61000-6-2 (Immunity) • EN 61000-6-3 (Emission) • FCC 47 CFR Part 15 B (Emission) • ICES-003
Radio spectrum	• ETSI EN 300 328 • FCC Part 15.247 • RSS-210
Magnetic fields	EN 61 000-4-8, Test level 5 for continuous field (severe industrial environment)
Encapsulation	IP 54 (IEC 60529)
Shock	25 g (IEC 60068-2-27)
Vibration	2 g (IEC 60068-2-6)
Drop	2 m (6.6 ft.)
Safety	EN/UL/CSA/PSE 60950-1

Physical data	
Camera weight, incl. battery	0.869 kg (1.91 lb.)
Camera size (L × W × H)	246 × 97 × 184 mm (9.7 × 3.8 × 7.2 in.)
Tripod mounting	UNC ¼"-20 (adapter needed)
Material	• Polycarbonate + acrylonitrile butadiene styrene (PC-ABS) • Thixomold magnesium • Thermoplastic elastomer (TPE)
Color	Graphite gray and black

Shipping information	
Packaging, type	Cardboard box
List of contents	• Hard transport case • Infrared camera with lens • Battery • Handstrap • Memory card • Power supply, incl. multi-plugs • Printed documentation • USB cable • Video cable
Packaging, weight	5.2 kg (11.5 lb.)
Packaging, size	500 × 190 × 370 mm (19.7 × 7.5 × 14.6 in.)
EAN-13	4743254001183
UPC-12	845188005214
Country of origin	Estonia

Supplies & accessories:

- 1196961; IR lens, f = 30 mm, 15° incl. case
- 1196960; IR lens, f = 10 mm, 45° incl. case
- T910814; Power supply, incl. multi plugs
- T911230ACC; Memory card SDHC 4 GB

- 1910423; USB cable Std A <-> Mini-B
- T198509; Cigarette lighter adapter kit, 12 VDC, 1.2 m/3.9 ft.
- 1910582ACC; Video cable
- T197771ACC; Bluetooth Headset
- T911093; Tool belt
- T198125; Battery charger, incl. power supply with multi plugs (Exx, Kxx)
- T199235; High-temperature lens
- T198113; IR lens, 76 mm (6°) with case and mounting support for Exx
- T198487; Li-Ion Battery pack 3.7V 17Wh
- T198484; Pouch for FLIR Exx series
- T198485; Sun shield
- T198341ACC; Transport case Exx
- T198486; Tripod Adapter
- T199363ACC; Battery Li-ion 3.6 V, 5.2 Ah, 19 Wh
- 19250-100; IR Window 2 in
- 19251-100; IR Window 3 in.
- 19252-100; IR Window 4 in.
- 19250-200; SS IR Window 2 in.
- 19251-200; SS IR Window 3 in.
- 19252-200; SS IR Window 4 in.
- T198586; FLIR Reporter Professional (license only)
- T198584; FLIR Tools
- T198583; FLIR Tools+ (download card incl. license key)
- DSW-10000; FLIR IR Camera Player
- APP-10002; FLIR Tools Mobile (Android Application)
- APP-10004; FLIR Tools (MacOS Application)
- T198697; FLIR ResearchIR Max + HSDR 4 (hardware sec. dev.)
- T199014; FLIR ResearchIR Max + HSDR 4 (printed license key)
- T199044; FLIR ResearchIR Max + HSDR 4 Upgrade (printed license key)
- T198696; FLIR ResearchIR Max 4 (hardware sec. dev.)
- T199013; FLIR ResearchIR Max 4 (printed license key)
- T199043; FLIR ResearchIR Max 4 Upgrade (printed license key)
- T198731; FLIR ResearchIR Standard 4 (hardware sec. dev.)
- T199012; FLIR ResearchIR Standard 4 (printed license key)
- T199042; FLIR ResearchIR Standard 4 Upgrade (printed license key)
- T199233; FLIR Atlas SDK for .NET
- T199234; FLIR Atlas SDK for MATLAB

23.13 FLIR E60

P/N: 64502-1202
Rev.: 35207

General description
The FLIR Exx series cameras are compact and rugged infrared cameras that can be used in harsh environments while still providing you with the latest technology such as a modern touch screen. A FLIR Exx series camera is the perfect choice when you are looking for a robust but feature-rich camera at an affordable price.
Benefits:
• Robust and sophisticated: The FLIR Exx series cameras have a robust and light-weight design and can withstand a 2 m drop. Large buttons combined with a modern touch screen and extensive measuring capabilities, they are the right choice for demanding inspections in the field. • Best value for money: The FLIR Exx series cameras combine good performance (up to 320 × 240 pixels), a user-friendly interface, and a rugged point-and-shoot design with an affordable price.

Imaging and optical data	
IR resolution	320 × 240 pixels
Thermal sensitivity/NETD	< 0.05°C @ +30°C (+86°F) / 50 mK
Field of view (FOV)	25° × 19°
Minimum focus distance	0.4 m (1.31 ft.)
Focal length	18 mm (0.7 in.)
Spatial resolution (IFOV)	1.36 mrad
F-number	1.3
Image frequency	60 Hz
Focus	Manual
Digital zoom	2× and 4×
Panning	Panning over zoomed-in images

Detector data	
Detector type	Focal plane array (FPA), uncooled microbolometer
Spectral range	7.5–13 µm

Image presentation	
Display	Touch screen, 3.5 in. LCD, 320 × 240 pixels
Image adjustment	Auto or manual

Image presentation modes	
Image modes	IR image, visual image, MSX, picture in picture, thumbnail gallery
Picture in Picture	Scalable IR area on visual image

Measurement	
Object temperature range	• –20°C to +120°C (–4°F to +248°F) • 0°C to +650°C (+32°F to +1202°F)
Accuracy	±2°C (±3.6°F) or ±2% of reading, for ambient temperature 10°C to 35°C (+50°F to 95°F)

Measurement analysis	
Spotmeter	3
Area	3 boxes with max./min./average
Automatic hot/cold detection	Auto hot or cold spotmeter markers within area

Measurement analysis	
Difference temperature	Delta temperature between measurement functions or reference temperature
Reference temperature	Manually set or captured from any measurement function
Emissivity correction	Variable from 0.01 to 1.0 or selected from materials list
External optics/windows correction	Automatic, based on inputs of optics/window transmission and temperature
Measurement corrections	Reflected temperature, optics transmission and atmospheric transmission

Set-up	
Color palettes	Arctic, Gray, Iron, Lava, Rainbow and Rainbow HC
Set-up commands	Local adaptation of units, language, date and time formats

Storage of images	
Image storage	Standard JPEG, including measurement data, on memory card
Image storage mode	Simultaneous storage of images in IR, visual and MSX

Image annotations	
Text	Text from predefined list or soft keyboard on touch screen
Report generation	• FLIR Tools software specifically designed to provide an easy way to create inspection reports. It is available on the major platforms – Android, Windows, MacOS, and iOS.

Video recording in camera	
Non-radiometric IR video recording	MPEG-4 to memory card

Video streaming	
Radiometric IR video streaming	Full dynamic to PC using USB
Non-radiometric IR video streaming	Uncompressed colorized video using USB

Digital camera	
Built-in digital camera	3.1 Mpixels (2048 × 1536 pixels), and one LED light
Digital camera, focus	Fixed focus
Built-in digital lens data	FOV 53° × 41°
Digital camera, aspect ratio	4:3

Laser pointer	
Laser	Activated by dedicated button
Laser alignment	Position is automatic displayed on the IR image
Laser classification	Class 2
Laser type	Semiconductor AlGaInP diode laser
Laser power	1 mW
Laser wavelength	635 nm (red)

Data communication interfaces	
SD Card	One card slot for removable SD memory cards

USB	
USB	• USB-A: Connect external USB device • USB Mini-B: Data transfer to and from PC / uncompressed colorized video
USB, standard	USB Mini-B: 2.0
USB, connector type	• USB-A connector • USB Mini-B connector

Composite video	
Video out	Composite
Video, standard	CVBS (ITU-R-BT.470 PAL/SMPTE 170M NTSC)
Video, connector type	4-pole 3.5 mm jack

Power system	
Battery type	Rechargeable Li ion battery
Battery voltage	3.7 V
Battery capacity	4.4 Ah, at +20°C to +25°C (+68°F to +77°F)
Battery operating time	Approx. 4 hours at +25°C (+77°F) ambient temperature and typical use
Charging system	In camera (AC adapter or 12 V from a vehicle) or 2-bay charger
Charging time	4 h to 90% capacity, charging status indicated by LED's
Charging temperature	0°C to +45°C (+32°F to +113°F)
Power management	Automatic shutdown and sleep mode (user selectable)
AC operation	AC adapter, 90–260 VAC input, 12 V output to camera
Start-up time from sleep mode	Instant on

Environmental data	
Operating temperature range	–15°C to +50°C (+5°F to +122°F)
Storage temperature range	–40°C to +70°C (–40°F to +158°F)
Humidity (operating and storage)	IEC 60068-2-30/24 h 95% relative humidity +25°C to +40°C (+77°F to +104°F) / 2 cycles
EMC	• EN 61000-6-2 (Immunity) • EN 61000-6-3 (Emission) • FCC 47 CFR Part 15 B (Emission)
Magnetic fields	EN 61 000-4-8, Test level 5 for continuous field (severe industrial environment)
Encapsulation	IP 54 (IEC 60529)
Shock	25 g (IEC 60068-2-27)
Vibration	2 g (IEC 60068-2-6)
Drop	2 m (6.6 ft.)
Safety	EN/UL/CSA/PSE 60950-1

Physical data	
Camera weight, incl. battery	0.869 kg (1.91 lb.)
Camera size (L × W × H)	246 × 97 × 184 mm (9.7 × 3.8 × 7.2 in.)
Tripod mounting	UNC ¼"-20 (adapter needed)

Physical data	
Material	• Polycarbonate + acrylonitrile butadiene styrene (PC-ABS) • Thixomold magnesium • Thermoplastic elastomer (TPE)
Color	Graphite gray and black

Shipping information	
Packaging, type	Cardboard box
List of contents	• Hard transport case • Infrared camera with lens • Battery (2 ea.) • Battery charger • Handstrap • Memory card • Power supply, incl. multi-plugs • Printed documentation • USB cable • Video cable
Packaging, weight	5.5 kg (12.1 lb.)
Packaging, size	500 × 190 × 370 mm (19.7 × 7.5 × 14.6 in.)
EAN-13	4743254001244
UPC-12	845188005276
Country of origin	Estonia

Supplies & accessories:

- 1196961; IR lens, f = 30 mm, 15° incl. case
- 1196960; IR lens, f = 10 mm, 45° incl. case
- T910814; Power supply, incl. multi plugs
- T911230ACC; Memory card SDHC 4 GB
- 1910423; USB cable Std A <-> Mini-B
- T198509; Cigarette lighter adapter kit, 12 VDC, 1.2 m/3.9 ft.
- 1910582ACC; Video cable
- T911093; Tool belt
- T198125; Battery charger, incl. power supply with multi plugs (Exx, Kxx)
- T199235; High-temperature lens
- T198113; IR lens, 76 mm (6°) with case and mounting support for Exx
- T198487; Li-Ion Battery pack 3.7V 17Wh
- T198484; Pouch for FLIR Exx series
- T198485; Sun shield
- T198341ACC; Transport case Exx
- T198486; Tripod Adapter
- T199363ACC; Battery Li-ion 3.6 V, 5.2 Ah, 19 Wh
- 19250-100; IR Window 2 in
- 19251-100; IR Window 3 in.
- 19252-100; IR Window 4 in.
- 19250-200; SS IR Window 2 in.
- 19251-200; SS IR Window 3 in.
- 19252-200; SS IR Window 4 in.
- T198586; FLIR Reporter Professional (license only)
- T198584; FLIR Tools
- T198583; FLIR Tools+ (download card incl. license key)
- DSW-10000; FLIR IR Camera Player
- T198697; FLIR ResearchIR Max + HSDR 4 (hardware sec. dev.)
- T199014; FLIR ResearchIR Max + HSDR 4 (printed license key)
- T199044; FLIR ResearchIR Max + HSDR 4 Upgrade (printed license key)
- T198696; FLIR ResearchIR Max 4 (hardware sec. dev.)
- T199013; FLIR ResearchIR Max 4 (printed license key)

- T199043; FLIR ResearchIR Max 4 Upgrade (printed license key)
- T198731; FLIR ResearchIR Standard 4 (hardware sec. dev.)
- T199012; FLIR ResearchIR Standard 4 (printed license key)
- T199042; FLIR ResearchIR Standard 4 Upgrade (printed license key)
- T199233; FLIR Atlas SDK for .NET
- T199234; FLIR Atlas SDK for MATLAB

23.14 FLIR E60 (incl. Wi-Fi)

P/N: 64501-0302
Rev.: 35207

General description
The FLIR Exx series cameras are compact and rugged infrared cameras that can be used in harsh environments while still providing you with the latest technology such as a modern touch screen and wireless connectivity. A FLIR Exx series camera is the perfect choice when you are looking for a robust but feature-rich camera at an affordable price.
Benefits:
• Robust and sophisticated: The FLIR Exx series cameras have a robust and light-weight design and can withstand a 2 m drop. Large buttons combined with a modern touch screen and extensive measuring capabilities, they are the right choice for demanding inspections in the field. • Easy communication: The Wi-Fi connectivity of the FLIR Exx series cameras allows you to connect to smart phones and tablets, for the wireless transfer of images or the remote control of the camera. The Bluetooth-based METERLiNK function transfers readings from external measurement instruments to the infrared image. • Best value for money: The FLIR Exx series cameras combine good performance (up to 320 × 240 pixels), a user-friendly interface, and a rugged point-and-shoot design with an affordable price.

Imaging and optical data	
IR resolution	320 × 240 pixels
Thermal sensitivity/NETD	< 0.05°C @ +30°C (+86°F) / 50 mK
Field of view (FOV)	25° × 19°
Minimum focus distance	0.4 m (1.31 ft.)
Focal length	18 mm (0.7 in.)
Spatial resolution (IFOV)	1.36 mrad
F-number	1.3
Image frequency	60 Hz
Focus	Manual
Digital zoom	2× and 4×
Panning	Panning over zoomed-in images

Detector data	
Detector type	Focal plane array (FPA), uncooled microbolometer
Spectral range	7.5–13 µm

Image presentation	
Display	Touch screen, 3.5 in. LCD, 320 × 240 pixels
Image adjustment	Auto or manual

Image presentation modes	
Image modes	IR image, visual image, MSX, picture in picture, thumbnail gallery
Picture in Picture	Scalable IR area on visual image

Measurement	
Object temperature range	• –20°C to +120°C (–4°F to +248°F) • 0°C to +650°C (+32°F to +1202°F)
Accuracy	±2°C (±3.6°F) or ±2% of reading, for ambient temperature 10°C to 35°C (+50°F to 95°F)

Measurement analysis	
Spotmeter	3
Area	3 boxes with max./min./average
Automatic hot/cold detection	Auto hot or cold spotmeter markers within area
Difference temperature	Delta temperature between measurement functions or reference temperature
Reference temperature	Manually set or captured from any measurement function
Emissivity correction	Variable from 0.01 to 1.0 or selected from materials list
External optics/windows correction	Automatic, based on inputs of optics/window transmission and temperature
Measurement corrections	Reflected temperature, optics transmission and atmospheric transmission

Set-up	
Color palettes	Arctic, Gray, Iron, Lava, Rainbow and Rainbow HC
Set-up commands	Local adaptation of units, language, date and time formats

Storage of images	
Image storage	Standard JPEG, including measurement data, on memory card
Image storage mode	Simultaneous storage of images in IR, visual and MSX

Image annotations	
Voice	60 seconds (via Bluetooth)
Text	Text from predefined list or soft keyboard on touch screen
METERLiNK	Wireless connection (Bluetooth) to: FLIR meters with METERLiNK
Report generation	• FLIR Tools software specifically designed to provide an easy way to create inspection reports. It is available on the major platforms – Android, Windows, MacOS, and iOS.

Video recording in camera	
Non-radiometric IR video recording	MPEG-4 to memory card

Video streaming	
Radiometric IR video streaming	Full dynamic to PC using USB
Non-radiometric IR video streaming	Uncompressed colorized video using USB

Digital camera	
Built-in digital camera	3.1 Mpixels (2048 × 1536 pixels), and one LED light
Digital camera, focus	Fixed focus
Built-in digital lens data	FOV 53° × 41°
Digital camera, aspect ratio	4:3

Laser pointer	
Laser	Activated by dedicated button
Laser alignment	Position is automatic displayed on the IR image

Laser pointer	
Laser classification	Class 2
Laser type	Semiconductor AlGaInP diode laser
Laser power	1 mW
Laser wavelength	635 nm (red)

Data communication interfaces	
Wi-Fi	Peer to peer (ad hoc) or infrastructure (network)
SD Card	One card slot for removable SD memory cards
Audio	Microphone headset via Bluetooth for voice annotation of images

USB	
USB	• USB-A: Connect external USB device • USB Mini-B: Data transfer to and from PC / uncompressed colorized video
USB, standard	USB Mini-B: 2.0
USB, connector type	• USB-A connector • USB Mini-B connector

Composite video	
Video out	Composite
Video, standard	CVBS (ITU-R-BT.470 PAL/SMPTE 170M NTSC)
Video, connector type	4-pole 3.5 mm jack

Radio	
Wi-Fi	• Standard: 802.11 b/g • Frequency range: 2412–2462 MHz • Max. output power: 15 dBm
Bluetooth	Frequency range: 2402–2480 MHz
Antenna	Internal

Power system	
Battery type	Rechargeable Li ion battery
Battery voltage	3.7 V
Battery capacity	4.4 Ah, at +20°C to +25°C (+68°F to +77°F)
Battery operating time	Approx. 4 hours at +25°C (+77°F) ambient temperature and typical use
Charging system	In camera (AC adapter or 12 V from a vehicle) or 2-bay charger
Charging time	4 h to 90% capacity, charging status indicated by LED's
Charging temperature	0°C to +45°C (+32°F to +113°F)
Power management	Automatic shutdown and sleep mode (user selectable)
AC operation	AC adapter, 90–260 VAC input, 12 V output to camera
Start-up time from sleep mode	Instant on

Environmental data	
Operating temperature range	–15°C to +50°C (+5°F to +122°F)
Storage temperature range	–40°C to +70°C (–40°F to +158°F)

Environmental data	
Humidity (operating and storage)	IEC 60068-2-30/24 h 95% relative humidity +25°C to +40°C (+77°F to +104°F) / 2 cycles
EMC	• ETSI EN 301 489-1 (radio) • ETSI EN 301 489-17 • EN 61000-6-2 (Immunity) • EN 61000-6-3 (Emission) • FCC 47 CFR Part 15 B (Emission) • ICES-003
Radio spectrum	• ETSI EN 300 328 • FCC Part 15.247 • RSS-210
Magnetic fields	EN 61 000-4-8, Test level 5 for continuous field (severe industrial environment)
Encapsulation	IP 54 (IEC 60529)
Shock	25 g (IEC 60068-2-27)
Vibration	2 g (IEC 60068-2-6)
Drop	2 m (6.6 ft.)
Safety	EN/UL/CSA/PSE 60950-1

Physical data	
Camera weight, incl. battery	0.869 kg (1.91 lb.)
Camera size (L × W × H)	246 × 97 × 184 mm (9.7 × 3.8 × 7.2 in.)
Tripod mounting	UNC ¼"-20 (adapter needed)
Material	• Polycarbonate + acrylonitrile butadiene styrene (PC-ABS) • Thixomold magnesium • Thermoplastic elastomer (TPE)
Color	Graphite gray and black

Shipping information	
Packaging, type	Cardboard box
List of contents	• Hard transport case • Infrared camera with lens • Battery (2 ea.) • Battery charger • Handstrap • Memory card • Power supply, incl. multi-plugs • Printed documentation • USB cable • Video cable
Packaging, weight	5.5 kg (12.1 lb.)
Packaging, size	500 × 190 × 370 mm (19.7 × 7.5 × 14.6 in.)
EAN-13	4743254001152
UPC-12	845188005184
Country of origin	Estonia

Supplies & accessories:

- 1196961; IR lens, f = 30 mm, 15° incl. case
- 1196960; IR lens, f = 10 mm, 45° incl. case
- T910814; Power supply, incl. multi plugs
- T911230ACC; Memory card SDHC 4 GB
- 1910423; USB cable Std A <-> Mini-B
- T198509; Cigarette lighter adapter kit, 12 VDC, 1.2 m/3.9 ft.

- 1910582ACC; Video cable
- T197771ACC; Bluetooth Headset
- T911093; Tool belt
- T198125; Battery charger, incl. power supply with multi plugs (Exx, Kxx)
- T199235; High-temperature lens
- T198113; IR lens, 76 mm (6°) with case and mounting support for Exx
- T198487; Li-Ion Battery pack 3.7V 17Wh
- T198484; Pouch for FLIR Exx series
- T198485; Sun shield
- T198341ACC; Transport case Exx
- T198486; Tripod Adapter
- T199363ACC; Battery Li-ion 3.6 V, 5.2 Ah, 19 Wh
- 19250-100; IR Window 2 in
- 19251-100; IR Window 3 in.
- 19252-100; IR Window 4 in.
- 19250-200; SS IR Window 2 in.
- 19251-200; SS IR Window 3 in.
- 19252-200; SS IR Window 4 in.
- T198586; FLIR Reporter Professional (license only)
- T198584; FLIR Tools
- T198583; FLIR Tools+ (download card incl. license key)
- DSW-10000; FLIR IR Camera Player
- APP-10002; FLIR Tools Mobile (Android Application)
- APP-10004; FLIR Tools (MacOS Application)
- T198697; FLIR ResearchIR Max + HSDR 4 (hardware sec. dev.)
- T199014; FLIR ResearchIR Max + HSDR 4 (printed license key)
- T199044; FLIR ResearchIR Max + HSDR 4 Upgrade (printed license key)
- T198696; FLIR ResearchIR Max 4 (hardware sec. dev.)
- T199013; FLIR ResearchIR Max 4 (printed license key)
- T199043; FLIR ResearchIR Max 4 Upgrade (printed license key)
- T198731; FLIR ResearchIR Standard 4 (hardware sec. dev.)
- T199012; FLIR ResearchIR Standard 4 (printed license key)
- T199042; FLIR ResearchIR Standard 4 Upgrade (printed license key)
- T199233; FLIR Atlas SDK for .NET
- T199234; FLIR Atlas SDK for MATLAB

23.15 FLIR E60 with Educational kit (DE)

P/N: 64501-0307
Rev.: 30791

General description
The kit consists of a FLIR E60, a DVD with educational movies, and guidebooks about applications for thermal imaging in building, industrial and R&D environments. See FLIR E60 for specifications.

Shipping information	
List of contents	• FLIR E60 • Educational DVD • Building guidebook • Industrial guidebook • R&D guidebook
EAN-13	4743254001602
UPC-12	845188008987
Country of origin	Estonia

Supplies & accessories:

- N/A

23.16 FLIR E60 with Educational kit (EN)

P/N: 64501-0304
Rev.: 30792

General description
The kit consists of a FLIR E60, a DVD with educational movies, and guidebooks about applications for thermal imaging in building, industrial and R&D environments. See FLIR E60 for specifications.

Shipping information	
List of contents	• FLIR E60 • Educational DVD • Building guidebook • Industrial guidebook • R&D guidebook
EAN-13	4743254001572
UPC-12	845188008956
Country of origin	Estonia

Supplies & accessories:

- N/A

23.17 FLIR E60 with Educational kit (ES)

P/N: 64501-0308
Rev.: 30793

General description
The kit consists of a FLIR E60, a DVD with educational movies, and guidebooks about applications for thermal imaging in building, industrial and R&D environments. See FLIR E60 for specifications.

Shipping information	
List of contents	• FLIR E60 • Educational DVD • Building guidebook • Industrial guidebook • R&D guidebook
EAN-13	4743254001619
UPC-12	845188008994
Country of origin	Estonia

Supplies & accessories:

- N/A

23.18 FLIR E60 with Educational kit (FR)

P/N: 64501-0306
Rev.: 30794

General description
The kit consists of a FLIR E60, a DVD with educational movies, and guidebooks about applications for thermal imaging in building, industrial and R&D environments. See FLIR E60 for specifications.

Shipping information	
List of contents	• FLIR E60 • Educational DVD • Building guidebook • Industrial guidebook • R&D guidebook
EAN-13	4743254001596
UPC-12	845188008970
Country of origin	Estonia

Supplies & accessories:

- N/A

23.19 FLIR E60 with Educational kit (IT)

P/N: 64501-0305
Rev.: 30795

General description
The kit consists of a FLIR E60, a DVD with educational movies, and guidebooks about applications for thermal imaging in building, industrial and R&D environments. See FLIR E60 for specifications.

Shipping information	
List of contents	• FLIR E60 • Educational DVD • Building guidebook • Industrial guidebook • R&D guidebook
EAN-13	4743254001589
UPC-12	845188008963
Country of origin	Estonia

Supplies & accessories:

- N/A

23.20 FLIR E60 with Educational kit (JA)

P/N: 64501-0309
Rev.: 30796

General description
The kit consists of a FLIR E60, a DVD with educational movies, and guidebooks about applications for thermal imaging in building, industrial and R&D environments. See FLIR E60 for specifications.

Shipping information	
List of contents	• FLIR E60 • Educational DVD • Building guidebook • Industrial guidebook • R&D guidebook
EAN-13	4743254001626
UPC-12	845188009007
Country of origin	Estonia

Supplies & accessories:

- N/A

23.21 FLIR E60 with Educational kit (KO)

P/N: 64501-0310
Rev.: 30797

General description
The kit consists of a FLIR E60, a DVD with educational movies, and guidebooks about applications for thermal imaging in building, industrial and R&D environments. See FLIR E60 for specifications.

Shipping information	
List of contents	• FLIR E60 • Educational DVD • Building guidebook • Industrial guidebook • R&D guidebook
EAN-13	4743254001633
UPC-12	845188009014
Country of origin	Estonia

Supplies & accessories:

- N/A

23.22 FLIR E60bx (incl. Wi-Fi)

P/N: 64501-0702
Rev.: 37543

General description
The FLIR Exx series cameras are compact and rugged infrared cameras that can be used in harsh environments while still providing you with the latest technology such as a modern touch screen and wireless connectivity. A FLIR Exx series camera is the perfect choice when you are looking for a robust but feature-rich camera at an affordable price.
Benefits:
• Robust and sophisticated: The FLIR Exx series cameras have a robust and light-weight design and can withstand a 2 m drop. Large buttons combined with a modern touch screen and extensive measuring capabilities, they are the right choice for demanding inspections in the field. • Easy communication: The Wi-Fi connectivity of the FLIR Exx series cameras allows you to connect to smart phones and tablets, for the wireless transfer of images or the remote control of the camera. The Bluetooth-based METERLiNK function transfers readings from external measurement instruments to the infrared image. • Best value for money: The FLIR Exx series cameras combine good performance (up to 320 × 240 pixels), a user-friendly interface, and a rugged point-and-shoot design with an affordable price.

Imaging and optical data	
IR resolution	320 × 240 pixels
Thermal sensitivity/NETD	<0.045°C @ +30°C (+86°F) / 45 mK
Field of view (FOV)	25° × 19°
Minimum focus distance	0.4 m (1.31 ft.)
Focal length	18 mm (0.7 in.)
Spatial resolution (IFOV)	1.36 mrad
F-number	1.3
Image frequency	60 Hz
Focus	Manual
Digital zoom	2× and 4×
Panning	Panning over zoomed-in images

Detector data	
Detector type	Focal plane array (FPA), uncooled microbolometer
Spectral range	7.5–13 µm

Image presentation	
Display	Touch screen, 3.5 in. LCD, 320 × 240 pixels
Image adjustment	Auto or manual

Image presentation modes	
Image modes	IR image, visual image, MSX, picture in picture, thumbnail gallery
Picture in Picture	Scalable IR area on visual image

Measurement	
Object temperature range	–20°C to +120°C (–4°F to +248°F)
Accuracy	±2°C (±3.6°F) or ±2% of reading, for ambient temperature 10°C to 35°C (+50°F to 95°F)

Measurement analysis	
Spotmeter	3
Area	3 boxes with max./min./average

Measurement analysis	
Automatic hot/cold detection	Auto hot or cold spotmeter markers within area
Difference temperature	Delta temperature between measurement functions or reference temperature
Reference temperature	Manually set or captured from any measurement function
Emissivity correction	Variable from 0.01 to 1.0 or selected from materials list
Measurement corrections	Reflected temperature, optics transmission and atmospheric transmission

Alarm	
Screening	Yes
Humidity alarm	1 humidity alarm, including dew point alarm
Insulation alarm	1 insulation alarm

Set-up	
Color palettes	Arctic, Gray, Iron, Lava, Rainbow and Rainbow HC
Set-up commands	Local adaptation of units, language, date and time formats

Storage of images	
Image storage	Standard JPEG, including measurement data, on memory card
Image storage mode	Simultaneous storage of images in IR, visual and MSX

Image annotations	
Voice	60 seconds (via Bluetooth)
Text	Text from predefined list or soft keyboard on touch screen
METERLiNK	Wireless connection (Bluetooth) to: FLIR meters with METERLiNK
Report generation	• FLIR Tools software specifically designed to provide an easy way to create inspection reports. It is available on the major platforms – Android, Windows, MacOS, and iOS.

Video recording in camera	
Non-radiometric IR video recording	MPEG-4 to memory card

Video streaming	
Radiometric IR video streaming	Full dynamic to PC using USB
Non-radiometric IR video streaming	Uncompressed colorized video using USB

Digital camera	
Built-in digital camera	3.1 Mpixels (2048 × 1536 pixels), and one LED light
Digital camera, focus	Fixed focus
Built-in digital lens data	FOV 53° × 41°
Digital camera, aspect ratio	4:3

Laser pointer	
Laser	Activated by dedicated button
Laser alignment	Position is automatic displayed on the IR image
Laser classification	Class 2
Laser type	Semiconductor AlGaInP diode laser
Laser power	1 mW
Laser wavelength	635 nm (red)

Data communication interfaces	
Wi-Fi	Peer-to-peer (ad hoc) or infrastructure (network)
SD Card	One card slot for removable SD memory cards
Audio	Microphone headset via Bluetooth for voice annotation of images

USB	
USB	• USB-A: Connect external USB device • USB Mini-B: Data transfer to and from PC / uncompressed colorized video
USB, standard	USB Mini-B: 2.0
USB, connector type	• USB-A connector • USB Mini-B connector

Composite video	
Video out	Composite
Video, standard	CVBS (ITU-R-BT.470 PAL/SMPTE 170M NTSC)
Video, connector type	4-pole 3.5 mm jack

Radio	
Wi-Fi	Standard: 802.11 b/g Frequency range: 2412–2462 MHz Max. output power: 15 dBm
Bluetooth	Frequency range: 2402–2480 MHz
Antenna	Internal

Power system	
Battery type	Rechargeable Li ion battery
Battery voltage	3.7 V
Battery capacity	4.4 Ah, at +20°C to +25°C (+68°F to +77°F)
Battery operating time	Approx. 4 hours at +25°C (+77°F) ambient temperature and typical use
Charging system	In camera (AC adapter or 12 V from a vehicle) or 2-bay charger
Charging time	4 hours to 90% capacity, charging status indicated by LED's
Charging temperature	0°C to +45°C (+32°F to +113°F)
Power management	Automatic shutdown and sleep mode (user selectable)
AC operation	AC adapter, 90–260 VAC input, 12 V output to camera
Start-up time from sleep mode	Instant on

Environmental data	
Operating temperature range	–15°C to +50°C (+5°F to +122°F)
Storage temperature range	–40°C to +70°C (–40°F to +158°F)
Humidity (operating and storage)	IEC 60068-2-30/24 h 95% relative humidity +25°C to +40°C (+77°F to +104°F) / 2 cycles
EMC	• ETSI EN 301 489-1 (radio) • ETSI EN 301 489-17 • EN 61000-6-2 (Immunity) • EN 61000-6-3 (Emission) • FCC 47 CFR Part 15 B (Emission) • ICES-003
Radio spectrum	• ETSI EN 300 328 • FCC Part 15.247 • RSS-210
Magnetic fields	EN 61 000-4-8, Test level 5 for continuous field (severe industrial environment)
Encapsulation	IP 54 (IEC 60529)
Shock	25 g (IEC 60068-2-27)
Vibration	2 g (IEC 60068-2-6)
Drop	2 m (6.6 ft.)
Safety	EN/UL/CSA/PSE 60950-1

Physical data	
Camera weight, incl. battery	0.869 kg (1.91 lb.)
Camera size (L × W × H)	246 × 97 × 184 mm (9.7 × 3.8 × 7.2 in.)
Tripod mounting	UNC ¼"-20 (adapter needed)
Material	• Polycarbonate + acrylonitrile butadiene styrene (PC-ABS) • Thixomold magnesium • Thermoplastic elastomer (TPE)
Color	Graphite gray and black

Shipping information	
Packaging, type	Cardboard box
List of contents	• Hard transport case • Infrared camera with lens • Battery (2 ea.) • Battery charger • Handstrap • Memory card • Power supply, incl. multi-plugs • Printed documentation • USB cable • Video cable
Packaging, weight	5.5 kg (12.1 lb.)
Packaging, size	500 × 190 × 370 mm (19.7 × 7.5 × 14.6 in.)
EAN-13	4743254001190
UPC-12	845188005221
Country of origin	Estonia

Supplies & accessories:

- 1196961; IR lens, f = 30 mm, 15° incl. case
- 1196960; IR lens, f = 10 mm, 45° incl. case
- T910814; Power supply, incl. multi plugs

- T911230ACC; Memory card SDHC 4 GB
- 1910423; USB cable Std A <-> Mini-B
- T198509; Cigarette lighter adapter kit, 12 VDC, 1.2 m/3.9 ft.
- 1910582ACC; Video cable
- T197771ACC; Bluetooth Headset
- T911093; Tool belt
- T198125; Battery charger, incl. power supply with multi plugs (Exx, Kxx)
- T199235; High-temperature lens
- T198113; IR lens, 76 mm (6°) with case and mounting support for Exx
- T198487; Li-Ion Battery pack 3.7V 17Wh
- T198484; Pouch for FLIR Exx series
- T198485; Sun shield
- T198341ACC; Transport case Exx
- T198486; Tripod Adapter
- T199363ACC; Battery Li-ion 3.6 V, 5.2 Ah, 19 Wh
- 19250-100; IR Window 2 in
- 19251-100; IR Window 3 in.
- 19252-100; IR Window 4 in.
- 19250-200; SS IR Window 2 in.
- 19251-200; SS IR Window 3 in.
- 19252-200; SS IR Window 4 in.
- T198586; FLIR Reporter Professional (license only)
- T198584; FLIR Tools
- T198583; FLIR Tools+ (download card incl. license key)
- DSW-10000; FLIR IR Camera Player
- APP-10002; FLIR Tools Mobile (Android Application)
- APP-10004; FLIR Tools (MacOS Application)
- T198697; FLIR ResearchIR Max + HSDR 4 (hardware sec. dev.)
- T199014; FLIR ResearchIR Max + HSDR 4 (printed license key)
- T199044; FLIR ResearchIR Max + HSDR 4 Upgrade (printed license key)
- T198696; FLIR ResearchIR Max 4 (hardware sec. dev.)
- T199013; FLIR ResearchIR Max 4 (printed license key)
- T199043; FLIR ResearchIR Max 4 Upgrade (printed license key)
- T198731; FLIR ResearchIR Standard 4 (hardware sec. dev.)
- T199012; FLIR ResearchIR Standard 4 (printed license key)
- T199042; FLIR ResearchIR Standard 4 Upgrade (printed license key)
- T199233; FLIR Atlas SDK for .NET
- T199234; FLIR Atlas SDK for MATLAB

23.23 FLIR E63 (incl. Wi-Fi)

P/N: 64501-0402
Rev.: 35207

General description
The FLIR Exx series cameras are compact and rugged infrared cameras that can be used in harsh environments while still providing you with the latest technology such as a modern touch screen and wireless connectivity. A FLIR Exx series camera is the perfect choice when you are looking for a robust but feature-rich camera at an affordable price.
Benefits:
• Robust and sophisticated: The FLIR Exx series cameras have a robust and light-weight design and can withstand a 2 m drop. Large buttons combined with a modern touch screen and extensive measuring capabilities, they are the right choice for demanding inspections in the field. • Easy communication: The Wi-Fi connectivity of the FLIR Exx series cameras allows you to connect to smart phones and tablets, for the wireless transfer of images or the remote control of the camera. The Bluetooth-based METERLiNK function transfers readings from external measurement instruments to the infrared image. • Best value for money: The FLIR Exx series cameras combine good performance (up to 320 × 240 pixels), a user-friendly interface, and a rugged point-and-shoot design with an affordable price.

Imaging and optical data	
IR resolution	320 × 240 pixels
Thermal sensitivity/NETD	< 0.05°C @ +30°C (+86°F) / 50 mK
Field of view (FOV)	25° × 19°
Minimum focus distance	0.4 m (1.31 ft.)
Focal length	18 mm (0.7 in.)
Spatial resolution (IFOV)	1.36 mrad
F-number	1.3
Image frequency	60 Hz
Focus	Manual
Digital zoom	2× and 4×
Panning	Panning over zoomed-in images

Detector data	
Detector type	Focal plane array (FPA), uncooled microbolometer
Spectral range	7.5–13 µm

Image presentation	
Display	Touch screen, 3.5 in. LCD, 320 × 240 pixels
Image adjustment	Auto or manual

Image presentation modes	
Image modes	IR image, visual image, MSX, picture in picture, thumbnail gallery
Picture in Picture	Scalable IR area on visual image

Measurement	
Object temperature range	• –20°C to +120°C (–4°F to +248°F) • 0°C to +650°C (+32°F to +1202°F)
Accuracy	±2°C (±3.6°F) or ±2% of reading, for ambient temperature 10°C to 35°C (+50°F to 95°F)

Measurement analysis	
Spotmeter	5
Area	3 boxes with max./min.
Automatic hot/cold detection	Auto hot spotmeter marker within area
Difference temperature	Delta temperature between measurement functions or reference temperature
Reference temperature	Manually set or captured from any measurement function
Emissivity correction	Variable from 0.01 to 1.0 or selected from materials list
External optics/windows correction	Automatic, based on inputs of optics/window transmission and temperature
Measurement corrections	Reflected temperature, optics transmission and atmospheric transmission

Set-up	
Color palettes	Arctic, Gray, Iron, Lava, Rainbow and Rainbow HC
Set-up commands	Local adaptation of units, language, date and time formats

Storage of images	
Image storage	Standard JPEG, including measurement data, on memory card
Image storage mode	Simultaneous storage of images in IR, visual and MSX

Image annotations	
Voice	60 seconds (via Bluetooth)
Text	Text from soft keyboard on touch screen
METERLiNK	Wireless connection (Bluetooth) to: Extech Moisture Meter MO297 Extech Clamp Meter EX845
Report generation	• FLIR Tools software specifically designed to provide an easy way to create inspection reports. It is available on the major platforms – Android, Windows, MacOS, and iOS.

Video recording in camera	
Non-radiometric IR video recording	MPEG-4 to memory card

Video streaming	
Radiometric IR video streaming	Full dynamic to PC using USB
Non-radiometric IR video streaming	Uncompressed colorized video using USB

Digital camera	
Built-in digital camera	3.1 Mpixels (2048 × 1536 pixels), and one LED light
Digital camera, focus	Fixed focus
Built-in digital lens data	FOV 53° × 41°
Digital camera, aspect ratio	4:3

Laser pointer	
Laser	Activated by dedicated button
Laser alignment	Position is automatic displayed on the IR image
Laser classification	Class 2
Laser type	Semiconductor AlGaInP diode laser
Laser power	1 mW
Laser wavelength	635 nm (red)

Data communication interfaces	
Wi-Fi	Peer to peer (ad hoc) or infrastructure (network)
SD Card	One card slot for removable SD memory cards
Audio	Microphone headset via Bluetooth for voice annotation of images

USB	
USB	• USB-A: Connect external USB device • USB Mini-B: Data transfer to and from PC / uncompressed colorized video
USB, standard	USB Mini-B: 2.0
USB, connector type	• USB-A connector • USB Mini-B connector

Composite video	
Video out	Composite
Video, standard	CVBS (ITU-R-BT.470 PAL/SMPTE 170M NTSC)
Video, connector type	4-pole 3.5 mm jack

Radio	
Wi-Fi	• Standard: 802.11 b/g • Frequency range: 2412–2462 MHz • Max. output power: 15 dBm
Bluetooth	Frequency range: 2402–2480 MHz
Antenna	Internal

Power system	
Battery type	Rechargeable Li ion battery
Battery voltage	3.7 V
Battery capacity	4.4 Ah, at +20°C to +25°C (+68°F to +77°F)
Battery operating time	Approx. 4 hours at +25°C (+77°F) ambient temperature and typical use
Charging system	In camera (AC adapter or 12 V from a vehicle) or 2-bay charger
Charging time	4 h to 90% capacity, charging status indicated by LED's
Charging temperature	0°C to +45°C (+32°F to +113°F)
Power management	Automatic shutdown and sleep mode (user selectable)
AC operation	AC adapter, 90–260 VAC input, 12 V output to camera
Start-up time from sleep mode	Instant on

Environmental data	
Operating temperature range	–15°C to +50°C (+5°F to +122°F)
Storage temperature range	–40°C to +70°C (–40°F to +158°F)
Humidity (operating and storage)	IEC 60068-2-30/24 h 95% relative humidity +25°C to +40°C (+77°F to +104°F) / 2 cycles
EMC	• ETSI EN 301 489-1 (radio) • ETSI EN 301 489-17 • EN 61000-6-2 (Immunity) • EN 61000-6-3 (Emission) • FCC 47 CFR Part 15 B (Emission) • ICES-003
Radio spectrum	• ETSI EN 300 328 • FCC Part 15.247 • RSS-210
Magnetic fields	EN 61 000-4-8, Test level 5 for continuous field (severe industrial environment)
Encapsulation	IP 54 (IEC 60529)
Shock	25 g (IEC 60068-2-27)
Vibration	2 g (IEC 60068-2-6)
Drop	2 m (6.6 ft.)
Safety	EN/UL/CSA/PSE 60950-1

Physical data	
Camera weight, incl. battery	0.869 kg (1.91 lb.)
Camera size (L × W × H)	246 × 97 × 184 mm (9.7 × 3.8 × 7.2 in.)
Tripod mounting	UNC ¼"-20 (adapter needed)
Material	• Polycarbonate + acrylonitrile butadiene styrene (PC-ABS) • Thixomold magnesium • Thermoplastic elastomer (TPE)
Color	Graphite gray and black

Shipping information	
Packaging, type	Cardboard box
List of contents	• Hard transport case • Infrared camera with lens • Battery (2 ea.) • Battery charger • Handstrap • Memory card • Power supply, incl. multi-plugs • Printed documentation • USB cable • Video cable
Packaging, weight	5.5 kg (12.1 lb.)
Packaging, size	500 × 190 × 370 mm (19.7 × 7.5 × 14.6 in.)
EAN-13	4743254001169
UPC-12	845188005191
Country of origin	Estonia

Supplies & accessories:

- 1196961; IR lens, f = 30 mm, 15° incl. case
- 1196960; IR lens, f = 10 mm, 45° incl. case
- T910814; Power supply, incl. multi plugs

- T911230ACC; Memory card SDHC 4 GB
- 1910423; USB cable Std A <-> Mini-B
- T198509; Cigarette lighter adapter kit, 12 VDC, 1.2 m/3.9 ft.
- 1910582ACC; Video cable
- T197771ACC; Bluetooth Headset
- T911093; Tool belt
- T198125; Battery charger, incl. power supply with multi plugs (Exx, Kxx)
- T199235; High-temperature lens
- T198113; IR lens, 76 mm (6°) with case and mounting support for Exx
- T198487; Li-Ion Battery pack 3.7V 17Wh
- T198484; Pouch for FLIR Exx series
- T198485; Sun shield
- T198341ACC; Transport case Exx
- T198486; Tripod Adapter
- T199363ACC; Battery Li-ion 3.6 V, 5.2 Ah, 19 Wh
- 19250-100; IR Window 2 in
- 19251-100; IR Window 3 in.
- 19252-100; IR Window 4 in.
- 19250-200; SS IR Window 2 in.
- 19251-200; SS IR Window 3 in.
- 19252-200; SS IR Window 4 in.
- T198586; FLIR Reporter Professional (license only)
- T198584; FLIR Tools
- T198583; FLIR Tools+ (download card incl. license key)
- DSW-10000; FLIR IR Camera Player
- APP-10002; FLIR Tools Mobile (Android Application)
- APP-10004; FLIR Tools (MacOS Application)
- T198697; FLIR ResearchIR Max + HSDR 4 (hardware sec. dev.)
- T199014; FLIR ResearchIR Max + HSDR 4 (printed license key)
- T199044; FLIR ResearchIR Max + HSDR 4 Upgrade (printed license key)
- T198696; FLIR ResearchIR Max 4 (hardware sec. dev.)
- T199013; FLIR ResearchIR Max 4 (printed license key)
- T199043; FLIR ResearchIR Max 4 Upgrade (printed license key)
- T198731; FLIR ResearchIR Standard 4 (hardware sec. dev.)
- T199012; FLIR ResearchIR Standard 4 (printed license key)
- T199042; FLIR ResearchIR Standard 4 Upgrade (printed license key)
- T199233; FLIR Atlas SDK for .NET
- T199234; FLIR Atlas SDK for MATLAB

24 Mechanical drawings

Camera with built-in IR lens f=18 mm (25°)

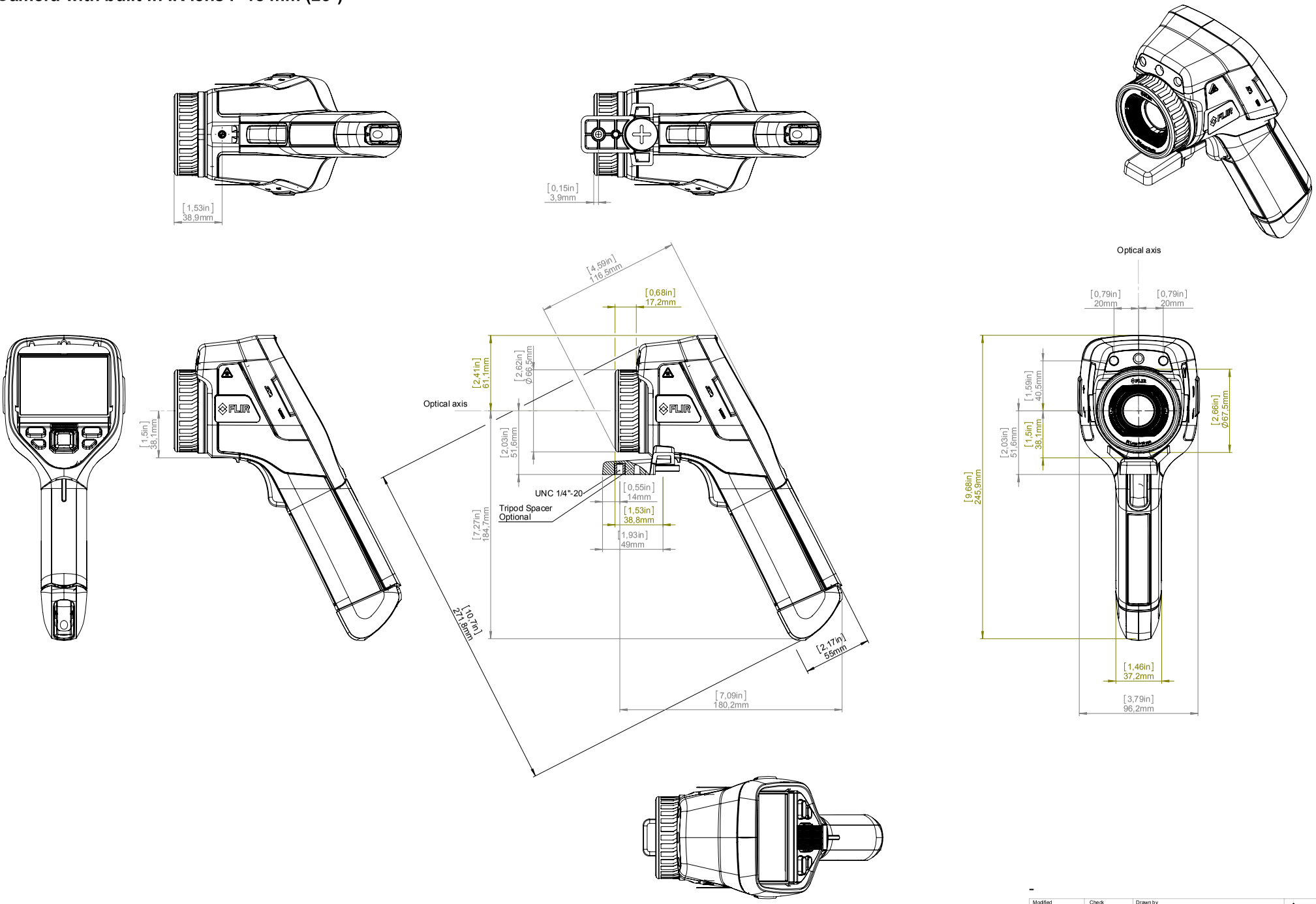

Modified	Check	Drawn by
2015-10-28	JOHG	R&D Thermography

Denomination: Basic dimensions Flir Exx series

Size: A3 | Scale: 1:2 | Sheet: 1(5)

Drawing No.: T127869 | Size: B

© 2012, FLIR Systems, Inc. All rights reserved worldwide. No part of this drawing may be reproduced, stored in a retrieval system, or transmitted in any form, or by any means, electronic, mechanical, photocopying, recording, or otherwise, without written permission from FLIR Systems, Inc. Specifications subject to change without further notice. Dimensional data is based on nominal values. Products may be subject to regional market considerations. License procedures may apply. Product may be subject to US Export Regulations. Please refer to exportquestions@flir.com with any questions. Diversion contrary to US law is prohibited.

Camera with Lens IR f=10 mm (45°)

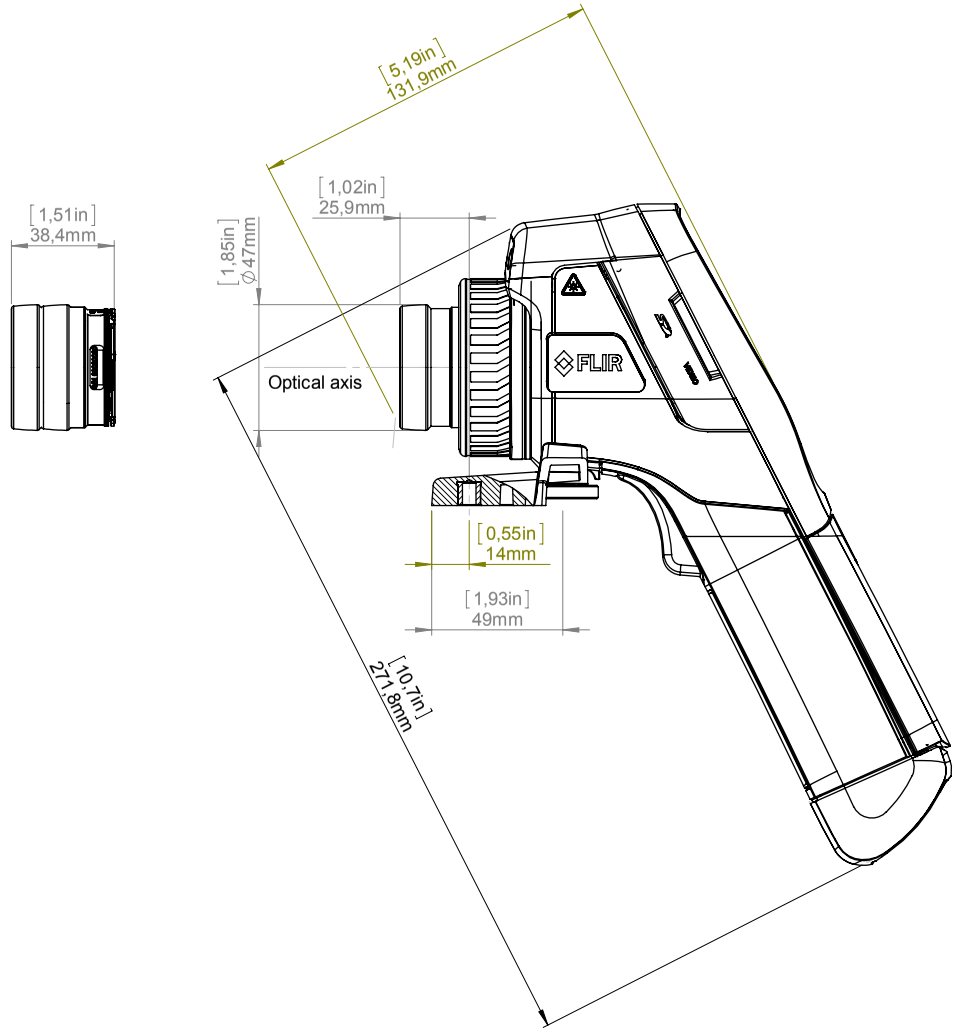

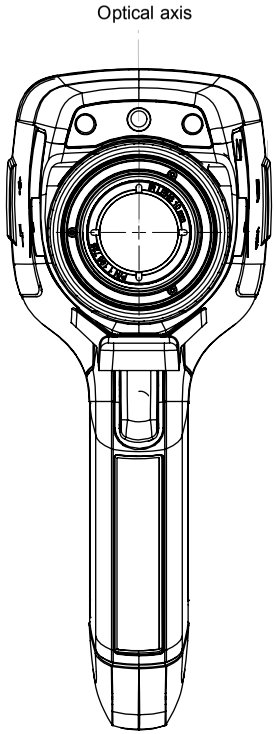

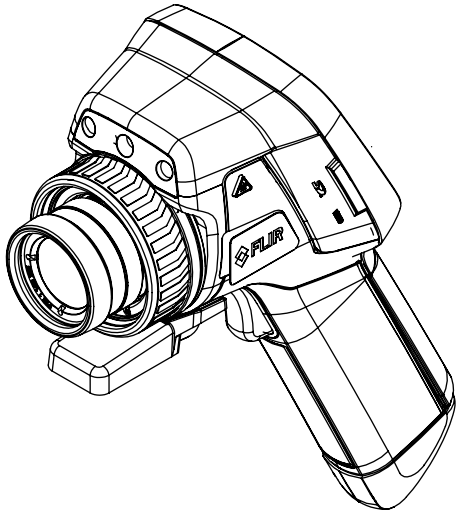

-

For additional dimensions see page 1

Modified	Check	Drawn by
2015-10-28	JOHG	R&D Thermography

Denomination

Basic dimensions Flir Exx series

Size	Sheet
A3	2(5)
Scale 1:2	
Drawing No. T127869	Size B

© 2012. FLIR Systems, Inc. All rights reserved worldwide. No part of this drawing may be reproduced, stored in a retrieval system, or transmitted in any form, or by any means, electronic, mechanical, photocopying, recording, or otherwise, without written permission from FLIR Systems, Inc. Specifications subject to change without further notice. Dimensional data is based on nominal values. Products may be subject to regional market considerations. License procedures may apply. Product may be subject to US Export Regulations. Please refer to exportquestions@flir.com with any questions. Diversion contrary to US law is prohibited.

Camera with Lens IR f=30 mm (15°)

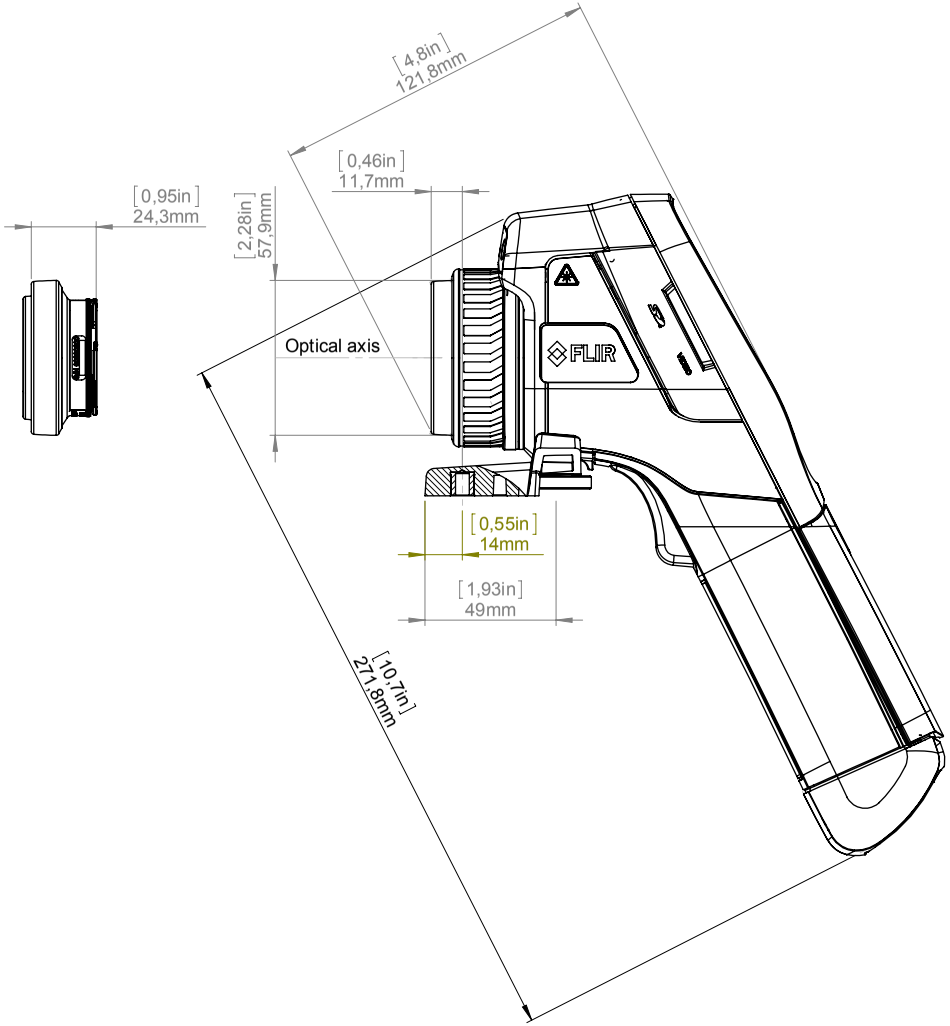

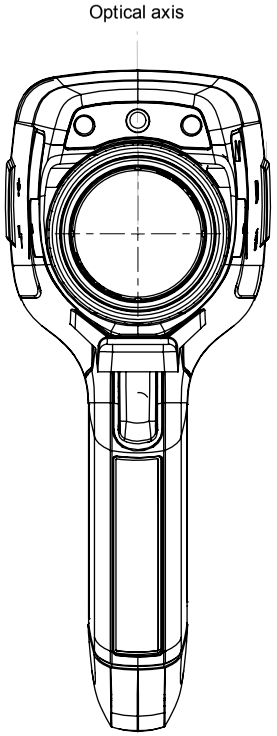

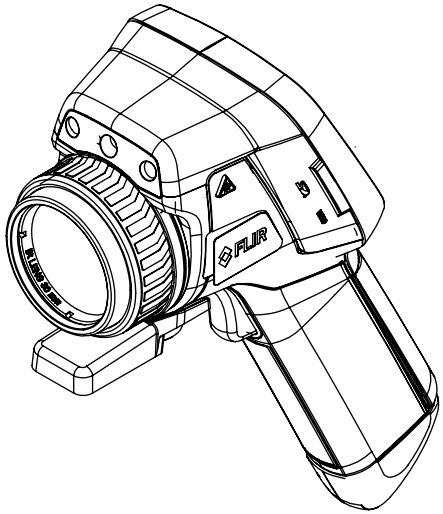

For additional dimensions see page 1

Modified	Check	Drawn by	
2015-10-28	JOHG	R&D Thermography	

Denomination: Basic dimensions Flir Exx series

Size: A3 | Scale: 1:2 | Sheet: 3(5)

Drawing No.: T127869 | Size: B

© 2012. FLIR Systems, Inc. All rights reserved worldwide. No part of this drawing may be reproduced, stored in a retrieval system, or transmitted in any form, or by any means, electronic, mechanical, photocopying, recording, or otherwise, without written permission from FLIR Systems, Inc. Specifications subject to change without further notice. Dimensional data is based on nominal values. Products may be subject to regional market considerations. License procedures may apply. Product may be subject to US Export Regulations. Please refer to exportquestions@flir.com with any questions. Diversion contrary to US law is prohibited.

Camera with Lens IR f=76 mm (6°) incl support

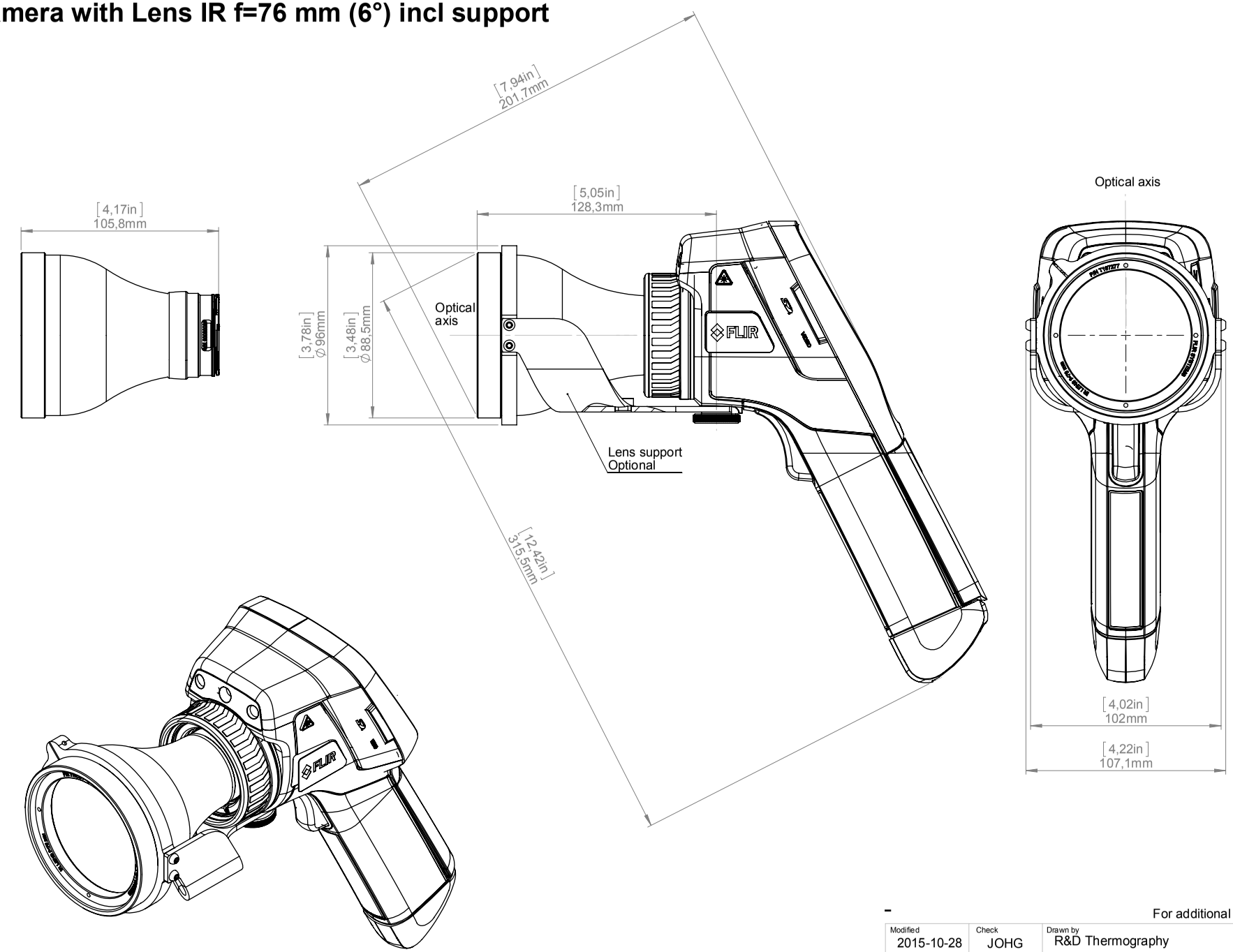

For additional dimensions see page 1

Modified	Check	Drawn by	
2015-10-28	JOHG	R&D Thermography	

Denomination

Basic dimensions Flir Exx series

Size	Sheet
A3	4(5)
Scale 1:2	
Drawing No. T127869	Size B

© 2012, FLIR Systems, Inc. All rights reserved worldwide. No part of this drawing may be reproduced, stored in a retrieval system, or transmitted in any form, or by any means, electronic, mechanical, photocopying, recording, or otherwise, without written permission from FLIR Systems, Inc. Specifications subject to change without further notice. Dimensional data is based on nominal values. Products may be subject to regional market considerations. License procedures may apply. Product may be subject to US Export Regulations. Please refer to exportquestions@flir.com with any questions. Diversion contrary to US law is prohibited.

25 CE Declaration of conformity

September 15, 2013 AQ320046

CE Declaration of Conformity

This is to certify that the System listed below have been designed and manufactured to meet the requirements, as applicable, of the following EU-Directives and corresponding harmonising standards. The systems consequently meet the requirements for the CE-mark.

Directives:

Directive 2004/108/EC	**Electromagnetic Compatibility**
Directive 2006/95/EC	**"Low voltage Directive"** (Power Supply)
Directive 1999/5/EC	**"R&TTE on radio equipment and telecommunications terminal equipment"**
Directive 2002/96/EC	**Waste electrical and electronic equipment; WEEE** (As applicable)

Standards:

Emission:	**EN 61000-6-3;**	**Electro magnetic Compatibility Generic standards - Emission**
Immunity:	**EN 61000-6-2;**	**Electro magnetic Compatibility Generic standards - Immunity**
Safety (Power Supply):	**EN 60950;** (or other)	**Safety of information technology equipment**
Radio	**EN 300328** **EN 301489**	

System: **FLIR EXX series**

FLIR Systems AB
Quality Assurance

Björn Svensson
Director

FLIR Systems AB • Antennvägen 6 • P.O. Box 7376 • SE-187 15 Täby • Sweden
Telephone: +46 8 753 25 00 • Telefax: +46 8 753 23 64
Registered No: 556256-6579
www.flir.se

26 Cleaning the camera

26.1 Camera housing, cables, and other items

26.1.1 Liquids

Use one of these liquids:

- Warm water
- A weak detergent solution

26.1.2 Equipment

A soft cloth

26.1.3 Procedure

Follow this procedure:

1. Soak the cloth in the liquid.
2. Twist the cloth to remove excess liquid.
3. Clean the part with the cloth.

CAUTION

Do not apply solvents or similar liquids to the camera, the cables, or other items. This can cause damage.

26.2 Infrared lens

26.2.1 Liquids

Use one of these liquids:

- A commercial lens cleaning liquid with more than 30% isopropyl alcohol.
- 96% ethyl alcohol (C_2H_5OH).

26.2.2 Equipment

Cotton wool

26.2.3 Procedure

Follow this procedure:

1. Soak the cotton wool in the liquid.
2. Twist the cotton wool to remove excess liquid.
3. Clean the lens one time only and discard the cotton wool.

WARNING

Make sure that you read all applicable MSDS (Material Safety Data Sheets) and warning labels on containers before you use a liquid: the liquids can be dangerous.

CAUTION

- Be careful when you clean the infrared lens. The lens has a delicate anti-reflective coating.
- Do not clean the infrared lens too vigorously. This can damage the anti-reflective coating.

27 Application examples

27.1 Moisture & water damage

27.1.1 General

It is often possible to detect moisture and water damage in a house by using an infrared camera. This is partly because the damaged area has a different heat conduction property and partly because it has a different thermal capacity to store heat than the surrounding material.

Many factors can come into play as to how moisture or water damage will appear in an infrared image.

For example, heating and cooling of these parts takes place at different rates depending on the material and the time of day. For this reason, it is important that other methods are used as well to check for moisture or water damage.

27.1.2 Figure

The image below shows extensive water damage on an external wall where the water has penetrated the outer facing because of an incorrectly installed window ledge.

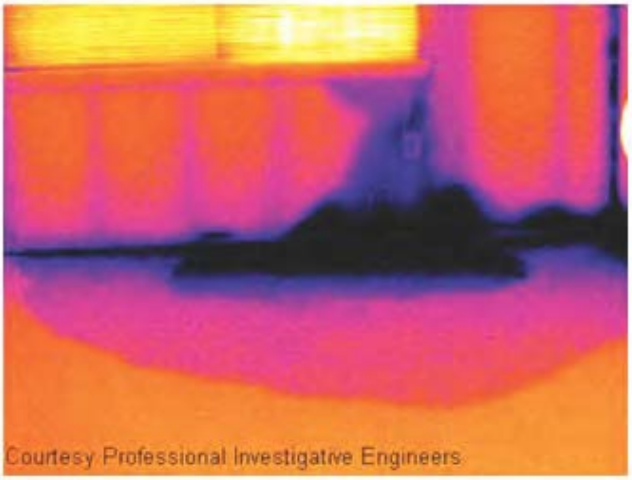

27.2 Faulty contact in socket

27.2.1 General

Depending on the type of connection a socket has, an improperly connected wire can result in local temperature increase. This temperature increase is caused by the reduced contact area between the connection point of the incoming wire and the socket , and can result in an electrical fire.

A socket's construction may differ dramatically from one manufacturer to another. For this reason, different faults in a socket can lead to the same typical appearance in an infrared image.

Local temperature increase can also result from improper contact between wire and socket, or from difference in load.

27.2.2 Figure

The image below shows a connection of a cable to a socket where improper contact in the connection has resulted in local temperature increase.

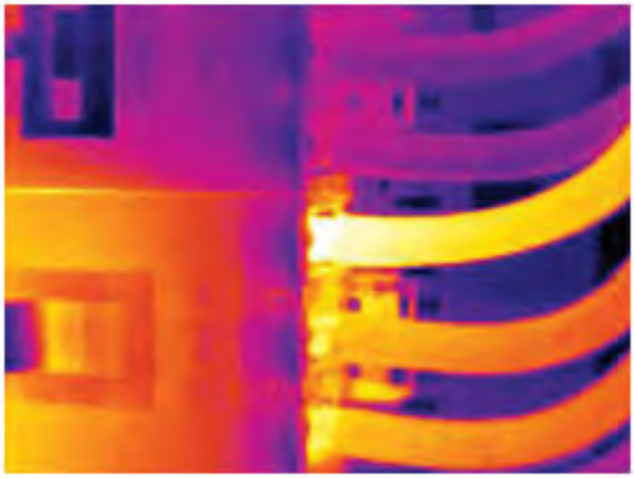

27.3 Oxidized socket

27.3.1 General

Depending on the type of socket and the environment in which the socket is installed, oxides may occur on the socket's contact surfaces. These oxides can lead to locally increased resistance when the socket is loaded, which can be seen in an infrared image as local temperature increase.

A socket’s construction may differ dramatically from one manufacturer to another. For this reason, different faults in a socket can lead to the same typical appearance in an infrared image.

Local temperature increase can also result from improper contact between a wire and socket, or from difference in load.

27.3.2 Figure

The image below shows a series of fuses where one fuse has a raised temperature on the contact surfaces against the fuse holder. Because of the fuse holder’s blank metal, the temperature increase is not visible there, while it is visible on the fuse’s ceramic material.

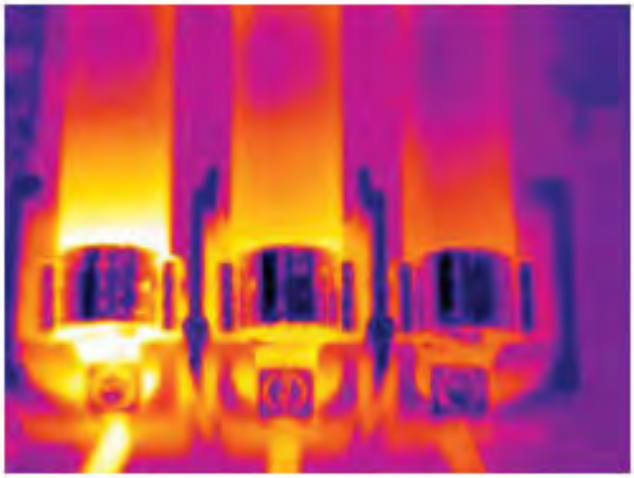

27.4 Insulation deficiencies

27.4.1 General

Insulation deficiencies may result from insulation losing volume over the course of time and thereby not entirely filling the cavity in a frame wall.

An infrared camera allows you to see these insulation deficiencies because they either have a different heat conduction property than sections with correctly installed insulation, and/or show the area where air is penetrating the frame of the building.

When you are inspecting a building, the temperature difference between the inside and outside should be at least 10°C (18°F). Studs, water pipes, concrete columns, and similar components may resemble an insulation deficiency in an infrared image. Minor differences may also occur naturally.

27.4.2 Figure

In the image below, insulation in the roof framing is lacking. Due to the absence of insulation, air has forced its way into the roof structure, which thus takes on a different characteristic appearance in the infrared image.

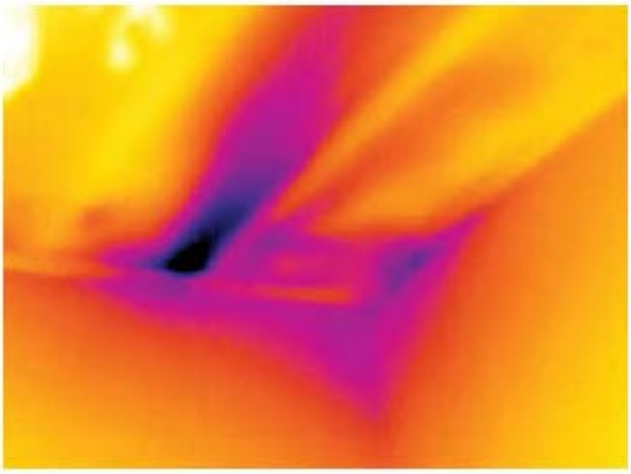

27.5 Draft

27.5.1 General

Draft can be found under baseboards, around door and window casings, and above ceiling trim. This type of draft is often possible to see with an infrared camera, as a cooler airstream cools down the surrounding surface.

When you are investigating draft in a house, there should be sub-atmospheric pressure in the house. Close all doors, windows, and ventilation ducts, and allow the kitchen fan to run for a while before you take the infrared images.

An infrared image of draft often shows a typical stream pattern. You can see this stream pattern clearly in the picture below.

Also keep in mind that drafts can be concealed by heat from floor heating circuits.

27.5.2 Figure

The image below shows a ceiling hatch where faulty installation has resulted in a strong draft.

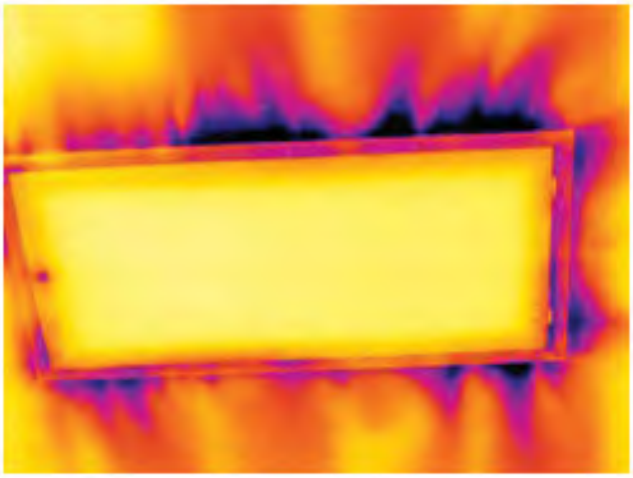

28 About FLIR Systems

FLIR Systems was established in 1978 to pioneer the development of high-performance infrared imaging systems, and is the world leader in the design, manufacture, and marketing of thermal imaging systems for a wide variety of commercial, industrial, and government applications. Today, FLIR Systems embraces five major companies with outstanding achievements in infrared technology since 1958—the Swedish AGEMA Infrared Systems (formerly AGA Infrared Systems), the three United States companies Indigo Systems, FSI, and Inframetrics, and the French company Cedip.

Since 2007, FLIR Systems has acquired several companies with world-leading expertise in sensor technologies:

- Extech Instruments (2007)
- Ifara Tecnologías (2008)
- Salvador Imaging (2009)
- OmniTech Partners (2009)
- Directed Perception (2009)
- Raymarine (2010)
- ICx Technologies (2010)
- TackTick Marine Digital Instruments (2011)
- Aerius Photonics (2011)
- Lorex Technology (2012)
- Traficon (2012)
- MARSS (2013)
- DigitalOptics micro-optics business (2013)
- DVTEL (2015)

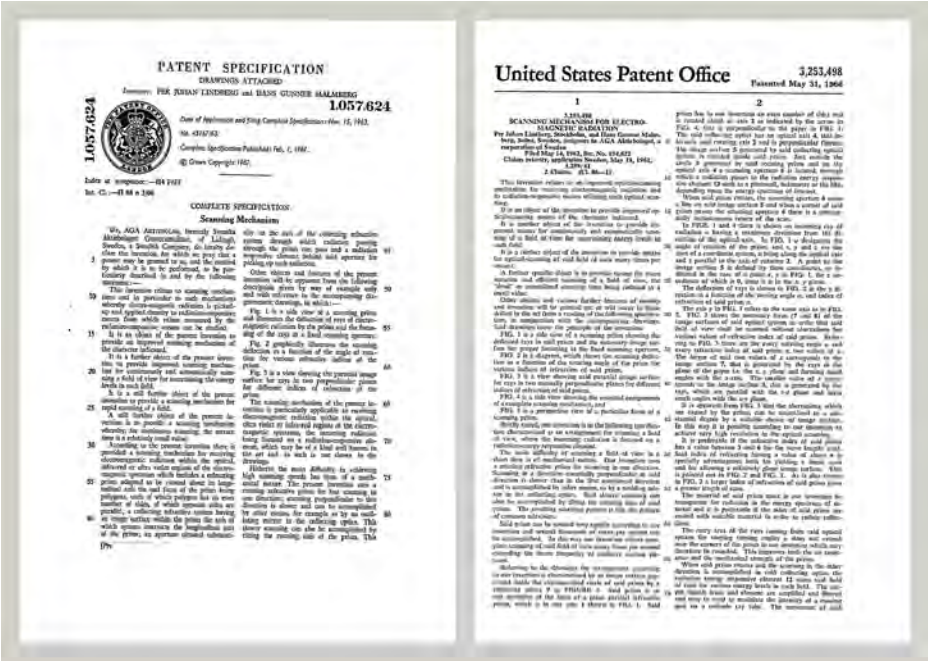
PATENT SPECIFICATION
DRAWINGS ATTACHED
1,057,624
COMPLETE SPECIFICATION
Scanning Mechanism

United States Patent Office
3,253,498
Patented May 31, 1966
SCANNING MECHANISM FOR ELECTRO-MAGNETIC RADIATION

Figure 28.1 Patent documents from the early 1960s

FLIR Systems has three manufacturing plants in the United States (Portland, OR, Boston, MA, Santa Barbara, CA) and one in Sweden (Stockholm). Since 2007 there is also a manufacturing plant in Tallinn, Estonia. Direct sales offices in Belgium, Brazil, China, France, Germany, Great Britain, Hong Kong, Italy, Japan, Korea, Sweden, and the USA —together with a worldwide network of agents and distributors—support our international customer base.

FLIR Systems is at the forefront of innovation in the infrared camera industry. We anticipate market demand by constantly improving our existing cameras and developing new

ones. The company has set milestones in product design and development such as the introduction of the first battery-operated portable camera for industrial inspections, and the first uncooled infrared camera, to mention just two innovations.

Figure 28.2 1969: Thermovision Model 661. The camera weighed approximately 25 kg (55 lb.), the oscilloscope 20 kg (44 lb.), and the tripod 15 kg (33 lb.). The operator also needed a 220 VAC generator set, and a 10 L (2.6 US gallon) jar with liquid nitrogen. To the left of the oscilloscope the Polaroid attachment (6 kg/13 lb.) can be seen.

Figure 28.3 2015: FLIR One, an accessory to iPhone and Android mobile phones. Weight: 90 g (3.2 oz.).

FLIR Systems manufactures all vital mechanical and electronic components of the camera systems itself. From detector design and manufacturing, to lenses and system electronics, to final testing and calibration, all production steps are carried out and supervised by our own engineers. The in-depth expertise of these infrared specialists ensures the accuracy and reliability of all vital components that are assembled into your infrared camera.

28.1 More than just an infrared camera

At FLIR Systems we recognize that our job is to go beyond just producing the best infrared camera systems. We are committed to enabling all users of our infrared camera systems to work more productively by providing them with the most powerful camera–software combination. Especially tailored software for predictive maintenance, R & D, and process monitoring is developed in-house. Most software is available in a wide variety of languages.

We support all our infrared cameras with a wide variety of accessories to adapt your equipment to the most demanding infrared applications.

28.2 Sharing our knowledge

Although our cameras are designed to be very user-friendly, there is a lot more to thermography than just knowing how to handle a camera. Therefore, FLIR Systems has founded the Infrared Training Center (ITC), a separate business unit, that provides certified training courses. Attending one of the ITC courses will give you a truly hands-on learning experience.

The staff of the ITC are also there to provide you with any application support you may need in putting infrared theory into practice.

28.3 Supporting our customers

FLIR Systems operates a worldwide service network to keep your camera running at all times. If you discover a problem with your camera, local service centers have all the equipment and expertise to solve it within the shortest possible time. Therefore, there is

no need to send your camera to the other side of the world or to talk to someone who does not speak your language.

29 Glossary

absorption (absorption factor)	The amount of radiation absorbed by an object relative to the received radiation. A number between 0 and 1.
atmosphere	The gases between the object being measured and the camera, normally air.
autoadjust	A function making a camera perform an internal image correction.
autopalette	The IR image is shown with an uneven spread of colors, displaying cold objects as well as hot ones at the same time.
blackbody	Totally non-reflective object. All its radiation is due to its own temperature.
blackbody radiator	An IR radiating equipment with blackbody properties used to calibrate IR cameras.
calculated atmospheric transmission	A transmission value computed from the temperature, the relative humidity of air and the distance to the object.
cavity radiator	A bottle shaped radiator with an absorbing inside, viewed through the bottleneck.
color temperature	The temperature for which the color of a blackbody matches a specific color.
conduction	The process that makes heat diffuse into a material.
continuous adjust	A function that adjusts the image. The function works all the time, continuously adjusting brightness and contrast according to the image content.
convection	Convection is a heat transfer mode where a fluid is brought into motion, either by gravity or another force, thereby transferring heat from one place to another.
dual isotherm	An isotherm with two color bands, instead of one.
emissivity (emissivity factor)	The amount of radiation coming from an object, compared to that of a blackbody. A number between 0 and 1.
emittance	Amount of energy emitted from an object per unit of time and area (W/m^2)
environment	Objects and gases that emit radiation towards the object being measured.
estimated atmospheric transmission	A transmission value, supplied by a user, replacing a calculated one
external optics	Extra lenses, filters, heat shields etc. that can be put between the camera and the object being measured.
filter	A material transparent only to some of the infrared wavelengths.
FOV	Field of view: The horizontal angle that can be viewed through an IR lens.
FPA	Focal plane array: A type of IR detector.
graybody	An object that emits a fixed fraction of the amount of energy of a blackbody for each wavelength.
IFOV	Instantaneous field of view: A measure of the geometrical resolution of an IR camera.

image correction (internal or external)	A way of compensating for sensitivity differences in various parts of live images and also of stabilizing the camera.
infrared	Non-visible radiation, having a wavelength from about 2–13 µm.
IR	infrared
isotherm	A function highlighting those parts of an image that fall above, below or between one or more temperature intervals.
isothermal cavity	A bottle-shaped radiator with a uniform temperature viewed through the bottleneck.
Laser LocatIR	An electrically powered light source on the camera that emits laser radiation in a thin, concentrated beam to point at certain parts of the object in front of the camera.
laser pointer	An electrically powered light source on the camera that emits laser radiation in a thin, concentrated beam to point at certain parts of the object in front of the camera.
level	The center value of the temperature scale, usually expressed as a signal value.
manual adjust	A way to adjust the image by manually changing certain parameters.
NETD	Noise equivalent temperature difference. A measure of the image noise level of an IR camera.
noise	Undesired small disturbance in the infrared image
object parameters	A set of values describing the circumstances under which the measurement of an object was made, and the object itself (such as emissivity, reflected apparent temperature, distance etc.)
object signal	A non-calibrated value related to the amount of radiation received by the camera from the object.
palette	The set of colors used to display an IR image.
pixel	Stands for *picture element*. One single spot in an image.
radiance	Amount of energy emitted from an object per unit of time, area and angle ($W/m^2/sr$)
radiant power	Amount of energy emitted from an object per unit of time (W)
radiation	The process by which electromagnetic energy, is emitted by an object or a gas.
radiator	A piece of IR radiating equipment.
range	The current overall temperature measurement limitation of an IR camera. Cameras can have several ranges. Expressed as two blackbody temperatures that limit the current calibration.
reference temperature	A temperature which the ordinary measured values can be compared with.
reflection	The amount of radiation reflected by an object relative to the received radiation. A number between 0 and 1.
relative humidity	Relative humidity represents the ratio between the current water vapour mass in the air and the maximum it may contain in saturation conditions.
saturation color	The areas that contain temperatures outside the present level/span settings are colored with the saturation colors. The saturation colors contain an ‘overflow’ color and an ‘underflow’ color. There is also a third red saturation color that marks everything saturated by the detector indicating that the range should probably be changed.

span	The interval of the temperature scale, usually expressed as a signal value.
spectral (radiant) emittance	Amount of energy emitted from an object per unit of time, area and wavelength ($W/m^2/\mu m$)
temperature difference, or difference of temperature.	A value which is the result of a subtraction between two temperature values.
temperature range	The current overall temperature measurement limitation of an IR camera. Cameras can have several ranges. Expressed as two blackbody temperatures that limit the current calibration.
temperature scale	The way in which an IR image currently is displayed. Expressed as two temperature values limiting the colors.
thermogram	infrared image
transmission (or transmittance) factor	Gases and materials can be more or less transparent. Transmission is the amount of IR radiation passing through them. A number between 0 and 1.
transparent isotherm	An isotherm showing a linear spread of colors, instead of covering the highlighted parts of the image.
visual	Refers to the video mode of a IR camera, as opposed to the normal, thermographic mode. When a camera is in video mode it captures ordinary video images, while thermographic images are captured when the camera is in IR mode.

30 Thermographic measurement techniques

30.1 Introduction

An infrared camera measures and images the emitted infrared radiation from an object. The fact that radiation is a function of object surface temperature makes it possible for the camera to calculate and display this temperature.

However, the radiation measured by the camera does not only depend on the temperature of the object but is also a function of the emissivity. Radiation also originates from the surroundings and is reflected in the object. The radiation from the object and the reflected radiation will also be influenced by the absorption of the atmosphere.

To measure temperature accurately, it is therefore necessary to compensate for the effects of a number of different radiation sources. This is done on-line automatically by the camera. The following object parameters must, however, be supplied for the camera:

- The emissivity of the object
- The reflected apparent temperature
- The distance between the object and the camera
- The relative humidity
- Temperature of the atmosphere

30.2 Emissivity

The most important object parameter to set correctly is the emissivity which, in short, is a measure of how much radiation is emitted from the object, compared to that from a perfect blackbody of the same temperature.

Normally, object materials and surface treatments exhibit emissivity ranging from approximately 0.1 to 0.95. A highly polished (mirror) surface falls below 0.1, while an oxidized or painted surface has a higher emissivity. Oil-based paint, regardless of color in the visible spectrum, has an emissivity over 0.9 in the infrared. Human skin exhibits an emissivity 0.97 to 0.98.

Non-oxidized metals represent an extreme case of perfect opacity and high reflexivity, which does not vary greatly with wavelength. Consequently, the emissivity of metals is low – only increasing with temperature. For non-metals, emissivity tends to be high, and decreases with temperature.

30.2.1 Finding the emissivity of a sample

30.2.1.1 Step 1: Determining reflected apparent temperature

Use one of the following two methods to determine reflected apparent temperature:

30.2.1.1.1 Method 1: Direct method

Follow this procedure:

1. Look for possible reflection sources, considering that the incident angle = reflection angle (a = b).

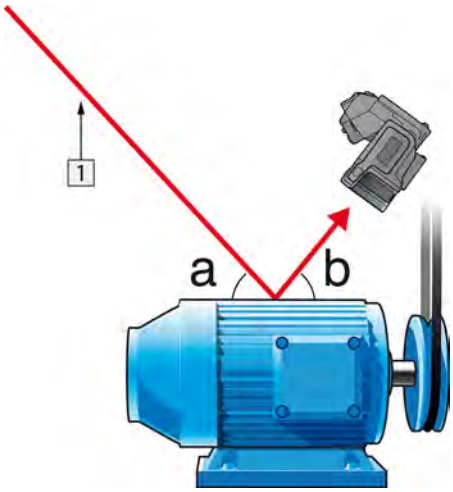

Figure 30.1 1 = Reflection source

2. If the reflection source is a spot source, modify the source by obstructing it using a piece if cardboard.

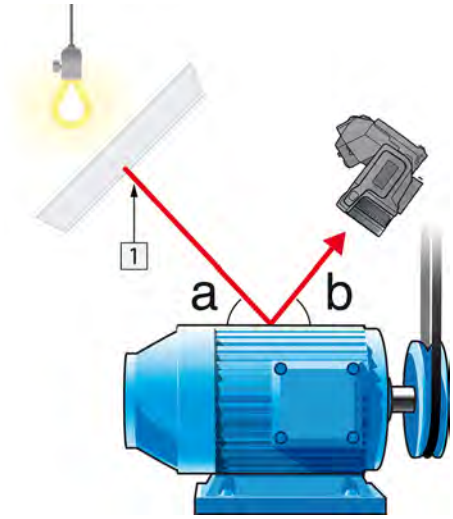

Figure 30.2 1 = Reflection source

3. Measure the radiation intensity (= apparent temperature) from the reflecting source using the following settings:
   - Emissivity: 1.0
   - D_{obj}: 0

   You can measure the radiation intensity using one of the following two methods:

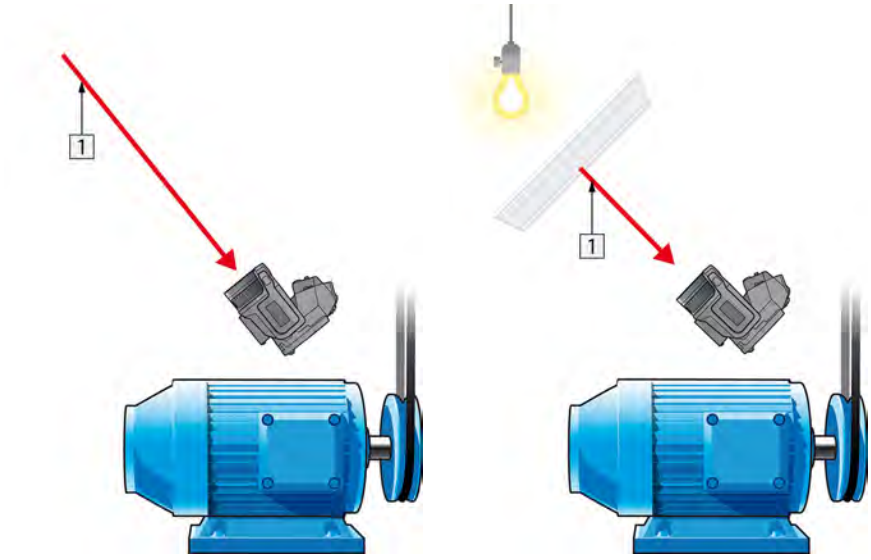

Figure 30.3 1 = Reflection source **Figure 30.4** 1 = Reflection source

Using a thermocouple to measure reflected apparent temperature is not recommended for two important reasons:

- A thermocouple does not measure radiation intensity
- A thermocouple requires a very good thermal contact to the surface, usually by gluing and covering the sensor by a thermal isolator.

30.2.1.1.2 Method 2: Reflector method

Follow this procedure:

1. Crumble up a large piece of aluminum foil.
2. Uncrumble the aluminum foil and attach it to a piece of cardboard of the same size.
3. Put the piece of cardboard in front of the object you want to measure. Make sure that the side with aluminum foil points to the camera.
4. Set the emissivity to 1.0.

5. Measure the apparent temperature of the aluminum foil and write it down.

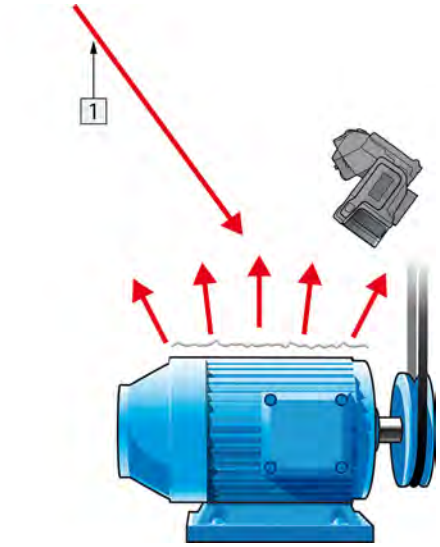

Figure 30.5 Measuring the apparent temperature of the aluminum foil.

30.2.1.2 Step 2: Determining the emissivity

Follow this procedure:

1. Select a place to put the sample.
2. Determine and set reflected apparent temperature according to the previous procedure.
3. Put a piece of electrical tape with known high emissivity on the sample.
4. Heat the sample at least 20 K above room temperature. Heating must be reasonably even.
5. Focus and auto-adjust the camera, and freeze the image.
6. Adjust *Level* and *Span* for best image brightness and contrast.
7. Set emissivity to that of the tape (usually 0.97).
8. Measure the temperature of the tape using one of the following measurement functions:
   - *Isotherm* (helps you to determine both the temperature and how evenly you have heated the sample)
   - *Spot* (simpler)
   - *Box Avg* (good for surfaces with varying emissivity).
9. Write down the temperature.
10. Move your measurement function to the sample surface.
11. Change the emissivity setting until you read the same temperature as your previous measurement.
12. Write down the emissivity.

Note

- Avoid forced convection
- Look for a thermally stable surrounding that will not generate spot reflections
- Use high quality tape that you know is not transparent, and has a high emissivity you are certain of
- This method assumes that the temperature of your tape and the sample surface are the same. If they are not, your emissivity measurement will be wrong.

30.3 Reflected apparent temperature

This parameter is used to compensate for the radiation reflected in the object. If the emissivity is low and the object temperature relatively far from that of the reflected it will be important to set and compensate for the reflected apparent temperature correctly.

30.4 Distance

The distance is the distance between the object and the front lens of the camera. This parameter is used to compensate for the following two facts:

- That radiation from the target is absorbed by the atmosphere between the object and the camera.
- That radiation from the atmosphere itself is detected by the camera.

30.5 Relative humidity

The camera can also compensate for the fact that the transmittance is also dependent on the relative humidity of the atmosphere. To do this set the relative humidity to the correct value. For short distances and normal humidity the relative humidity can normally be left at a default value of 50%.

30.6 Other parameters

In addition, some cameras and analysis programs from FLIR Systems allow you to compensate for the following parameters:

- Atmospheric temperature – *i.e.* the temperature of the atmosphere between the camera and the target
- External optics temperature – *i.e.* the temperature of any external lenses or windows used in front of the camera
- External optics transmittance – *i.e.* the transmission of any external lenses or windows used in front of the camera

31 History of infrared technology

Before the year 1800, the existence of the infrared portion of the electromagnetic spectrum wasn't even suspected. The original significance of the infrared spectrum, or simply ‘the infrared’ as it is often called, as a form of heat radiation is perhaps less obvious today than it was at the time of its discovery by Herschel in 1800.

Figure 31.1 Sir William Herschel (1738–1822)

The discovery was made accidentally during the search for a new optical material. Sir William Herschel – Royal Astronomer to King George III of England, and already famous for his discovery of the planet Uranus – was searching for an optical filter material to reduce the brightness of the sun’s image in telescopes during solar observations. While testing different samples of colored glass which gave similar reductions in brightness he was intrigued to find that some of the samples passed very little of the sun’s heat, while others passed so much heat that he risked eye damage after only a few seconds’ observation.

Herschel was soon convinced of the necessity of setting up a systematic experiment, with the objective of finding a single material that would give the desired reduction in brightness as well as the maximum reduction in heat. He began the experiment by actually repeating Newton’s prism experiment, but looking for the heating effect rather than the visual distribution of intensity in the spectrum. He first blackened the bulb of a sensitive mercury-in-glass thermometer with ink, and with this as his radiation detector he proceeded to test the heating effect of the various colors of the spectrum formed on the top of a table by passing sunlight through a glass prism. Other thermometers, placed outside the sun’s rays, served as controls.

As the blackened thermometer was moved slowly along the colors of the spectrum, the temperature readings showed a steady increase from the violet end to the red end. This was not entirely unexpected, since the Italian researcher, Landriani, in a similar experiment in 1777 had observed much the same effect. It was Herschel, however, who was the first to recognize that there must be a point where the heating effect reaches a maximum, and that measurements confined to the visible portion of the spectrum failed to locate this point.

Figure 31.2 Marsilio Landriani (1746–1815)

Moving the thermometer into the dark region beyond the red end of the spectrum, Herschel confirmed that the heating continued to increase. The maximum point, when he found it, lay well beyond the red end – in what is known today as the ‘infrared wavelengths’.

When Herschel revealed his discovery, he referred to this new portion of the electromagnetic spectrum as the ‘thermometrical spectrum’. The radiation itself he sometimes referred to as ‘dark heat’, or simply ‘the invisible rays’. Ironically, and contrary to popular opinion, it wasn't Herschel who originated the term ‘infrared’. The word only began to appear in print around 75 years later, and it is still unclear who should receive credit as the originator.

Herschel’s use of glass in the prism of his original experiment led to some early controversies with his contemporaries about the actual existence of the infrared wavelengths. Different investigators, in attempting to confirm his work, used various types of glass indiscriminately, having different transparencies in the infrared. Through his later experiments, Herschel was aware of the limited transparency of glass to the newly-discovered thermal radiation, and he was forced to conclude that optics for the infrared would probably be doomed to the use of reflective elements exclusively (i.e. plane and curved mirrors). Fortunately, this proved to be true only until 1830, when the Italian investigator, Melloni, made his great discovery that naturally occurring rock salt (NaCl) – which was available in large enough natural crystals to be made into lenses and prisms – is remarkably transparent to the infrared. The result was that rock salt became the principal infrared optical material, and remained so for the next hundred years, until the art of synthetic crystal growing was mastered in the 1930’s.

Figure 31.3 Macedonio Melloni (1798–1854)

Thermometers, as radiation detectors, remained unchallenged until 1829, the year Nobili invented the thermocouple. (Herschel’s own thermometer could be read to 0.2 °C (0.036 °F), and later models were able to be read to 0.05 °C (0.09 °F)). Then a breakthrough occurred; Melloni connected a number of thermocouples in series to form the first thermopile. The new device was at least 40 times as sensitive as the best thermometer of the day for detecting heat radiation – capable of detecting the heat from a person standing three meters away.

The first so-called ‘heat-picture’ became possible in 1840, the result of work by Sir John Herschel, son of the discoverer of the infrared and a famous astronomer in his own right. Based upon the differential evaporation of a thin film of oil when exposed to a heat pattern focused upon it, the thermal image could be seen by reflected light where the interference effects of the oil film made the image visible to the eye. Sir John also managed to obtain a primitive record of the thermal image on paper, which he called a ‘thermograph’.

Figure 31.4 Samuel P. Langley (1834–1906)

The improvement of infrared-detector sensitivity progressed slowly. Another major breakthrough, made by Langley in 1880, was the invention of the bolometer. This consisted of a thin blackened strip of platinum connected in one arm of a Wheatstone bridge circuit upon which the infrared radiation was focused and to which a sensitive galvanometer responded. This instrument is said to have been able to detect the heat from a cow at a distance of 400 meters.

An English scientist, Sir James Dewar, first introduced the use of liquefied gases as cooling agents (such as liquid nitrogen with a temperature of -196 °C (-320.8 °F)) in low temperature research. In 1892 he invented a unique vacuum insulating container in which it is possible to store liquefied gases for entire days. The common ‘thermos bottle’, used for storing hot and cold drinks, is based upon his invention.

Between the years 1900 and 1920, the inventors of the world ‘discovered’ the infrared. Many patents were issued for devices to detect personnel, artillery, aircraft, ships – and even icebergs. The first operating systems, in the modern sense, began to be developed during the 1914–18 war, when both sides had research programs devoted to the military exploitation of the infrared. These programs included experimental systems for enemy intrusion/detection, remote temperature sensing, secure communications, and ‘flying torpedo’ guidance. An infrared search system tested during this period was able to detect an approaching airplane at a distance of 1.5 km (0.94 miles), or a person more than 300 meters (984 ft.) away.

The most sensitive systems up to this time were all based upon variations of the bolometer idea, but the period between the two wars saw the development of two revolutionary new infrared detectors: the image converter and the photon detector. At first, the image converter received the greatest attention by the military, because it enabled an observer for the first time in history to literally ‘see in the dark’. However, the sensitivity of the image converter was limited to the near infrared wavelengths, and the most interesting military targets (i.e. enemy soldiers) had to be illuminated by infrared search beams. Since this involved the risk of giving away the observer’s position to a similarly-equipped enemy observer, it is understandable that military interest in the image converter eventually faded.

The tactical military disadvantages of so-called 'active’ (i.e. search beam-equipped) thermal imaging systems provided impetus following the 1939–45 war for extensive secret military infrared-research programs into the possibilities of developing ‘passive’ (no search beam) systems around the extremely sensitive photon detector. During this period, military secrecy regulations completely prevented disclosure of the status of infrared-imaging technology. This secrecy only began to be lifted in the middle of the 1950’s, and from that time adequate thermal-imaging devices finally began to be available to civilian science and industry.

32 Theory of thermography

32.1 Introduction

The subjects of infrared radiation and the related technique of thermography are still new to many who will use an infrared camera. In this section the theory behind thermography will be given.

32.2 The electromagnetic spectrum

The electromagnetic spectrum is divided arbitrarily into a number of wavelength regions, called *bands*, distinguished by the methods used to produce and detect the radiation. There is no fundamental difference between radiation in the different bands of the electromagnetic spectrum. They are all governed by the same laws and the only differences are those due to differences in wavelength.

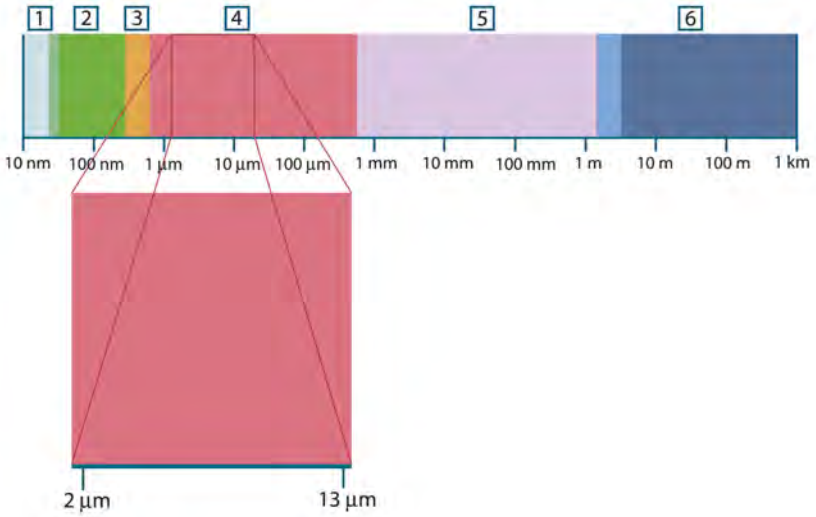

Figure 32.1 The electromagnetic spectrum. 1: X-ray; 2: UV; 3: Visible; 4: IR; 5: Microwaves; 6: Radiowaves.

Thermography makes use of the infrared spectral band. At the short-wavelength end the boundary lies at the limit of visual perception, in the deep red. At the long-wavelength end it merges with the microwave radio wavelengths, in the millimeter range.

The infrared band is often further subdivided into four smaller bands, the boundaries of which are also arbitrarily chosen. They include: the *near infrared* (0.75–3 µm), the *middle infrared* (3–6 µm), the *far infrared* (6–15 µm) and the *extreme infrared* (15–100 µm). Although the wavelengths are given in µm (micrometers), other units are often still used to measure wavelength in this spectral region, *e.g.* nanometer (nm) and Ångström (Å).

The relationships between the different wavelength measurements is:

$$10\,000\ \text{Å} = 1\,000\ \text{nm} = 1\ \mu = 1\ \mu\text{m}$$

32.3 Blackbody radiation

A blackbody is defined as an object which absorbs all radiation that impinges on it at any wavelength. The apparent misnomer *black* relating to an object emitting radiation is explained by Kirchhoff's Law (after *Gustav Robert Kirchhoff*, 1824–1887), which states that a body capable of absorbing all radiation at any wavelength is equally capable in the emission of radiation.

Figure 32.2 Gustav Robert Kirchhoff (1824–1887)

The construction of a blackbody source is, in principle, very simple. The radiation characteristics of an aperture in an isotherm cavity made of an opaque absorbing material represents almost exactly the properties of a blackbody. A practical application of the principle to the construction of a perfect absorber of radiation consists of a box that is light tight except for an aperture in one of the sides. Any radiation which then enters the hole is scattered and absorbed by repeated reflections so only an infinitesimal fraction can possibly escape. The blackness which is obtained at the aperture is nearly equal to a blackbody and almost perfect for all wavelengths.

By providing such an isothermal cavity with a suitable heater it becomes what is termed a *cavity radiator*. An isothermal cavity heated to a uniform temperature generates blackbody radiation, the characteristics of which are determined solely by the temperature of the cavity. Such cavity radiators are commonly used as sources of radiation in temperature reference standards in the laboratory for calibrating thermographic instruments, such as a FLIR Systems camera for example.

If the temperature of blackbody radiation increases to more than 525°C (977°F), the source begins to be visible so that it appears to the eye no longer black. This is the incipient red heat temperature of the radiator, which then becomes orange or yellow as the temperature increases further. In fact, the definition of the so-called *color temperature* of an object is the temperature to which a blackbody would have to be heated to have the same appearance.

Now consider three expressions that describe the radiation emitted from a blackbody.

32.3.1 Planck's law

Figure 32.3 Max Planck (1858–1947)

Max Planck (1858–1947) was able to describe the spectral distribution of the radiation from a blackbody by means of the following formula:

$$W_{\lambda b} = \frac{2\pi hc^2}{\lambda^5\left(e^{hc/\lambda kT} - 1\right)} \times 10^{-6}[Watt/m^2, \mu m]$$

where:

$W_{\lambda b}$	Blackbody spectral radiant emittance at wavelength λ.
c	Velocity of light = 3×10^8 m/s
h	Planck's constant = 6.6×10^{-34} Joule sec.
k	Boltzmann's constant = 1.4×10^{-23} Joule/K.
T	Absolute temperature (K) of a blackbody.
λ	Wavelength (µm).

Note The factor 10^{-6} is used since spectral emittance in the curves is expressed in Watt/m², µm.

Planck's formula, when plotted graphically for various temperatures, produces a family of curves. Following any particular Planck curve, the spectral emittance is zero at λ = 0, then increases rapidly to a maximum at a wavelength λ_{max} and after passing it approaches zero again at very long wavelengths. The higher the temperature, the shorter the wavelength at which maximum occurs.

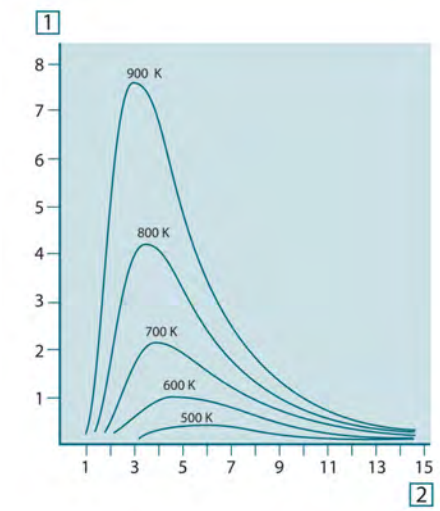

Figure 32.4 Blackbody spectral radiant emittance according to Planck's law, plotted for various absolute temperatures. 1: Spectral radiant emittance (W/cm² × 10³(µm)); 2: Wavelength (µm)

32.3.2 Wien's displacement law

By differentiating Planck's formula with respect to λ, and finding the maximum, we have:

$$\lambda_{max} = \frac{2898}{T}[\mu m]$$

This is Wien's formula (after *Wilhelm Wien*, 1864–1928), which expresses mathematically the common observation that colors vary from red to orange or yellow as the temperature of a thermal radiator increases. The wavelength of the color is the same as the wavelength calculated for λ_{max}. A good approximation of the value of λ_{max} for a given blackbody temperature is obtained by applying the rule-of-thumb 3 000/T µm. Thus, a very hot star such as Sirius (11 000 K), emitting bluish-white light, radiates with the peak of spectral radiant emittance occurring within the invisible ultraviolet spectrum, at wavelength 0.27 µm.

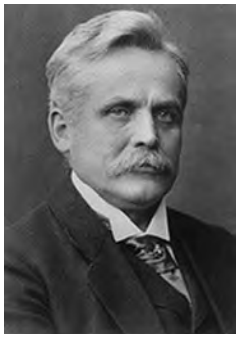

Figure 32.5 Wilhelm Wien (1864–1928)

The sun (approx. 6 000 K) emits yellow light, peaking at about 0.5 µm in the middle of the visible light spectrum.

At room temperature (300 K) the peak of radiant emittance lies at 9.7 µm, in the far infrared, while at the temperature of liquid nitrogen (77 K) the maximum of the almost insignificant amount of radiant emittance occurs at 38 µm, in the extreme infrared wavelengths.

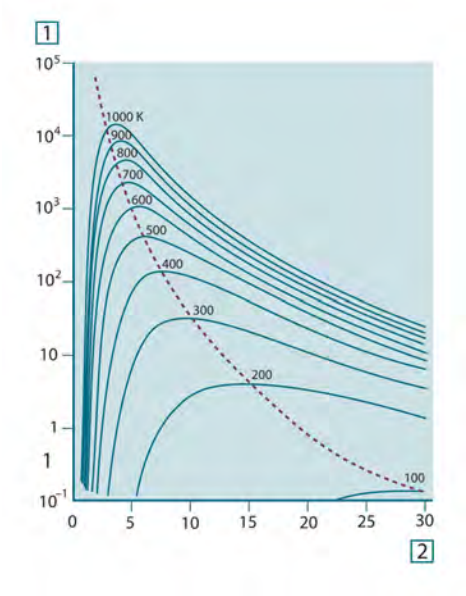

Figure 32.6 Planckian curves plotted on semi-log scales from 100 K to 1000 K. The dotted line represents the locus of maximum radiant emittance at each temperature as described by Wien's displacement law. 1: Spectral radiant emittance (W/cm^2 (µm)); 2: Wavelength (µm).

32.3.3 Stefan-Boltzmann's law

By integrating Planck's formula from λ = 0 to λ = ∞, we obtain the total radiant emittance (W_b) of a blackbody:

$$W_b = \sigma T^4 \ [\mathrm{Watt/m^2}]$$

This is the Stefan-Boltzmann formula (after *Josef Stefan*, 1835–1893, and *Ludwig Boltzmann*, 1844–1906), which states that the total emissive power of a blackbody is proportional to the fourth power of its absolute temperature. Graphically, W_b represents the area below the Planck curve for a particular temperature. It can be shown that the radiant emittance in the interval λ = 0 to λ_{max} is only 25% of the total, which represents about the amount of the sun's radiation which lies inside the visible light spectrum.

Figure 32.7 Josef Stefan (1835–1893), and Ludwig Boltzmann (1844–1906)

Using the Stefan-Boltzmann formula to calculate the power radiated by the human body, at a temperature of 300 K and an external surface area of approx. 2 m^2, we obtain 1 kW. This power loss could not be sustained if it were not for the compensating absorption of radiation from surrounding surfaces, at room temperatures which do not vary too drastically from the temperature of the body – or, of course, the addition of clothing.

32.3.4 Non-blackbody emitters

So far, only blackbody radiators and blackbody radiation have been discussed. However, real objects almost never comply with these laws over an extended wavelength region – although they may approach the blackbody behavior in certain spectral intervals. For example, a certain type of white paint may appear perfectly *white* in the visible light spectrum, but becomes distinctly *gray* at about 2 µm, and beyond 3 µm it is almost *black*.

There are three processes which can occur that prevent a real object from acting like a blackbody: a fraction of the incident radiation α may be absorbed, a fraction ρ may be reflected, and a fraction τ may be transmitted. Since all of these factors are more or less wavelength dependent, the subscript λ is used to imply the spectral dependence of their definitions. Thus:

- The spectral absorptance α_λ= the ratio of the spectral radiant power absorbed by an object to that incident upon it.
- The spectral reflectance ρ_λ = the ratio of the spectral radiant power reflected by an object to that incident upon it.
- The spectral transmittance τ_λ = the ratio of the spectral radiant power transmitted through an object to that incident upon it.

The sum of these three factors must always add up to the whole at any wavelength, so we have the relation:

$$\alpha_\lambda + \rho_\lambda + \tau_\lambda = 1$$

For opaque materials $\tau_\lambda = 0$ and the relation simplifies to:

$$\varepsilon_\lambda + \rho_\lambda = 1$$

Another factor, called the emissivity, is required to describe the fraction ε of the radiant emittance of a blackbody produced by an object at a specific temperature. Thus, we have the definition:

The spectral emissivity ε_λ= the ratio of the spectral radiant power from an object to that from a blackbody at the same temperature and wavelength.

Expressed mathematically, this can be written as the ratio of the spectral emittance of the object to that of a blackbody as follows:

$$\varepsilon_\lambda = \frac{W_{\lambda o}}{W_{\lambda b}}$$

Generally speaking, there are three types of radiation source, distinguished by the ways in which the spectral emittance of each varies with wavelength.

- A blackbody, for which $\varepsilon_\lambda = \varepsilon = 1$
- A graybody, for which $\varepsilon_\lambda = \varepsilon$ = constant less than 1

- A selective radiator, for which ε varies with wavelength

According to Kirchhoff's law, for any material the spectral emissivity and spectral absorptance of a body are equal at any specified temperature and wavelength. That is:

$$\varepsilon_\lambda = \alpha_\lambda$$

From this we obtain, for an opaque material (since $\alpha_\lambda + \rho_\lambda = 1$):

$$\varepsilon_\lambda + \rho_\lambda = 1$$

For highly polished materials ε_λ approaches zero, so that for a perfectly reflecting material (*i.e.* a perfect mirror) we have:

$$\rho_\lambda = 1$$

For a graybody radiator, the Stefan-Boltzmann formula becomes:

$$W = \varepsilon \sigma T^4 \, [\mathrm{Watt/m^2}]$$

This states that the total emissive power of a graybody is the same as a blackbody at the same temperature reduced in proportion to the value of ε from the graybody.

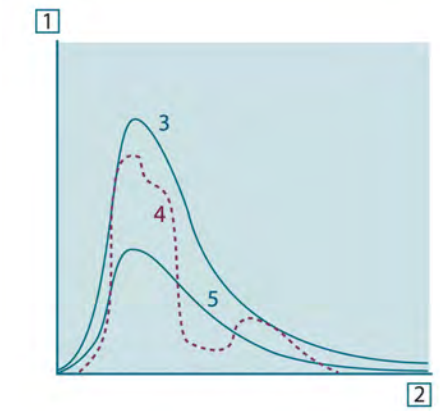

Figure 32.8 Spectral radiant emittance of three types of radiators. 1: Spectral radiant emittance; 2: Wavelength; 3: Blackbody; 4: Selective radiator; 5: Graybody.

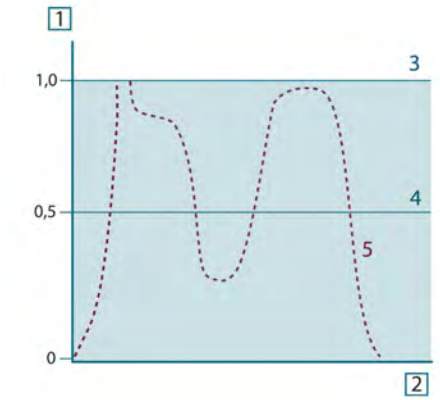

Figure 32.9 Spectral emissivity of three types of radiators. 1: Spectral emissivity; 2: Wavelength; 3: Blackbody; 4: Graybody; 5: Selective radiator.

32.4 Infrared semi-transparent materials

Consider now a non-metallic, semi-transparent body – let us say, in the form of a thick flat plate of plastic material. When the plate is heated, radiation generated within its volume must work its way toward the surfaces through the material in which it is partially absorbed. Moreover, when it arrives at the surface, some of it is reflected back into the interior. The back-reflected radiation is again partially absorbed, but some of it arrives at the other surface, through which most of it escapes; part of it is reflected back again. Although the progressive reflections become weaker and weaker they must all be added up when the total emittance of the plate is sought. When the resulting geometrical series is summed, the effective emissivity of a semi-transparent plate is obtained as:

$$\varepsilon_\lambda = \frac{(1-\rho_\lambda)(1-\tau_\lambda)}{1-\rho_\lambda\tau_\lambda}$$

When the plate becomes opaque this formula is reduced to the single formula:

$$\varepsilon_\lambda = 1-\rho_\lambda$$

This last relation is a particularly convenient one, because it is often easier to measure reflectance than to measure emissivity directly.

33 The measurement formula

As already mentioned, when viewing an object, the camera receives radiation not only from the object itself. It also collects radiation from the surroundings reflected via the object surface. Both these radiation contributions become attenuated to some extent by the atmosphere in the measurement path. To this comes a third radiation contribution from the atmosphere itself.

This description of the measurement situation, as illustrated in the figure below, is so far a fairly true description of the real conditions. What has been neglected could for instance be sun light scattering in the atmosphere or stray radiation from intense radiation sources outside the field of view. Such disturbances are difficult to quantify, however, in most cases they are fortunately small enough to be neglected. In case they are not negligible, the measurement configuration is likely to be such that the risk for disturbance is obvious, at least to a trained operator. It is then his responsibility to modify the measurement situation to avoid the disturbance e.g. by changing the viewing direction, shielding off intense radiation sources etc.

Accepting the description above, we can use the figure below to derive a formula for the calculation of the object temperature from the calibrated camera output.

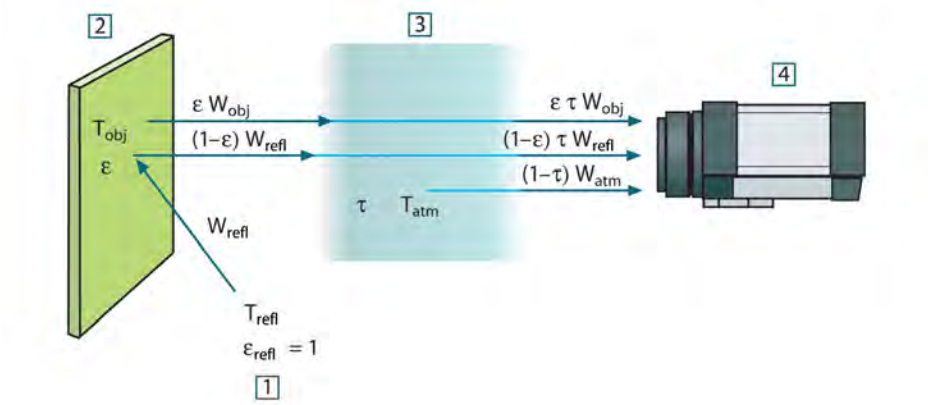

Figure 33.1 A schematic representation of the general thermographic measurement situation.1: Surroundings; 2: Object; 3: Atmosphere; 4: Camera

Assume that the received radiation power W from a blackbody source of temperature T_{source} on short distance generates a camera output signal U_{source} that is proportional to the power input (power linear camera). We can then write (Equation 1):

$$U_{source} = CW(T_{source})$$

or, with simplified notation:

$$U_{source} = CW_{source}$$

where C is a constant.

Should the source be a graybody with emittance ε, the received radiation would consequently be εW_{source}.

We are now ready to write the three collected radiation power terms:

1. *Emission from the object* = $\varepsilon\tau W_{obj}$, where ε is the emittance of the object and τ is the transmittance of the atmosphere. The object temperature is T_{obj}.

2. *Reflected emission from ambient sources* = $(1 - \varepsilon)\tau W_{refl}$, where $(1 - \varepsilon)$ is the reflectance of the object. The ambient sources have the temperature T_{refl}.
   It has here been assumed that the temperature T_{refl} is the same for all emitting surfaces within the halfsphere seen from a point on the object surface. This is of course sometimes a simplification of the true situation. It is, however, a necessary simplification in order to derive a workable formula, and T_{refl} can – at least theoretically – be given a value that represents an efficient temperature of a complex surrounding.

   Note also that we have assumed that the emittance for the surroundings = 1. This is correct in accordance with Kirchhoff's law: All radiation impinging on the surrounding surfaces will eventually be absorbed by the same surfaces. Thus the emittance = 1. (Note though that the latest discussion requires the complete sphere around the object to be considered.)
3. *Emission from the atmosphere* = $(1 - \tau)\tau W_{atm}$, where $(1 - \tau)$ is the emittance of the atmosphere. The temperature of the atmosphere is T_{atm}.

The total received radiation power can now be written (Equation 2):

$$W_{tot} = \varepsilon\tau W_{obj} + (1-\varepsilon)\tau W_{refl} + (1-\tau)W_{atm}$$

We multiply each term by the constant C of Equation 1 and replace the CW products by the corresponding U according to the same equation, and get (Equation 3):

$$U_{tot} = \varepsilon\tau U_{obj} + (1-\varepsilon)\tau U_{refl} + (1-\tau)U_{atm}$$

Solve Equation 3 for U_{obj} (Equation 4):

$$U_{obj} = \frac{1}{\varepsilon\tau}U_{tot} - \frac{1-\varepsilon}{\varepsilon}U_{refl} - \frac{1-\tau}{\varepsilon\tau}U_{atm}$$

This is the general measurement formula used in all the FLIR Systems thermographic equipment. The voltages of the formula are:

Table 33.1 Voltages

U_{obj}	Calculated camera output voltage for a blackbody of temperature T_{obj} i.e. a voltage that can be directly converted into true requested object temperature.
U_{tot}	Measured camera output voltage for the actual case.
U_{refl}	Theoretical camera output voltage for a blackbody of temperature T_{refl} according to the calibration.
U_{atm}	Theoretical camera output voltage for a blackbody of temperature T_{atm} according to the calibration.

The operator has to supply a number of parameter values for the calculation:

- the object emittance ε,
- the relative humidity,
- T_{atm}
- object distance (D_{obj})
- the (effective) temperature of the object surroundings, or the reflected ambient temperature T_{refl}, and
- the temperature of the atmosphere T_{atm}

This task could sometimes be a heavy burden for the operator since there are normally no easy ways to find accurate values of emittance and atmospheric transmittance for the actual case. The two temperatures are normally less of a problem provided the surroundings do not contain large and intense radiation sources.

A natural question in this connection is: How important is it to know the right values of these parameters? It could though be of interest to get a feeling for this problem already here by looking into some different measurement cases and compare the relative

magnitudes of the three radiation terms. This will give indications about when it is important to use correct values of which parameters.

The figures below illustrates the relative magnitudes of the three radiation contributions for three different object temperatures, two emittances, and two spectral ranges: SW and LW. Remaining parameters have the following fixed values:

- $\tau = 0.88$
- $T_{refl} = +20°C$ (+68°F)
- $T_{atm} = +20°C$ (+68°F)

It is obvious that measurement of low object temperatures are more critical than measuring high temperatures since the 'disturbing' radiation sources are relatively much stronger in the first case. Should also the object emittance be low, the situation would be still more difficult.

We have finally to answer a question about the importance of being allowed to use the calibration curve above the highest calibration point, what we call extrapolation. Imagine that we in a certain case measure $U_{tot} = 4.5$ volts. The highest calibration point for the camera was in the order of 4.1 volts, a value unknown to the operator. Thus, even if the object happened to be a blackbody, i.e. $U_{obj} = U_{tot}$, we are actually performing extrapolation of the calibration curve when converting 4.5 volts into temperature.

Let us now assume that the object is not black, it has an emittance of 0.75, and the transmittance is 0.92. We also assume that the two second terms of Equation 4 amount to 0.5 volts together. Computation of U_{obj} by means of Equation 4 then results in $U_{obj} = 4.5 / 0.75 / 0.92 – 0.5 = 6.0$. This is a rather extreme extrapolation, particularly when considering that the video amplifier might limit the output to 5 volts! Note, though, that the application of the calibration curve is a theoretical procedure where no electronic or other limitations exist. We trust that if there had been no signal limitations in the camera, and if it had been calibrated far beyond 5 volts, the resulting curve would have been very much the same as our real curve extrapolated beyond 4.1 volts, provided the calibration algorithm is based on radiation physics, like the FLIR Systems algorithm. Of course there must be a limit to such extrapolations.

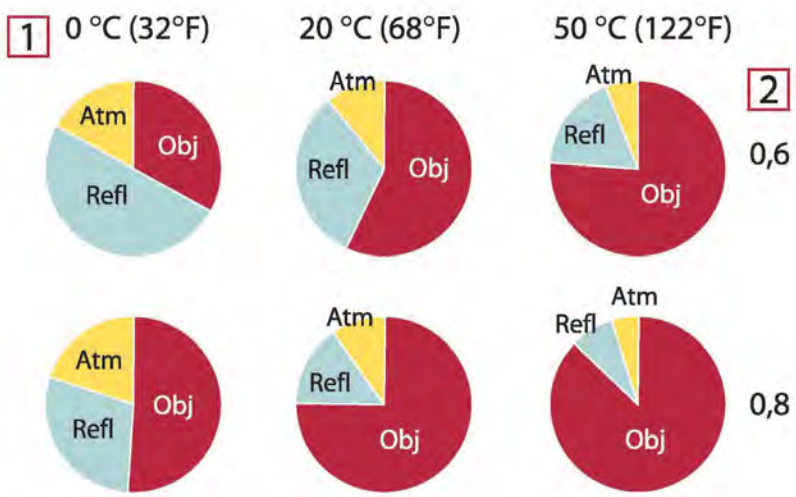

Figure 33.2 Relative magnitudes of radiation sources under varying measurement conditions (SW camera). 1: Object temperature; 2: Emittance; Obj: Object radiation; Refl: Reflected radiation; Atm: atmosphere radiation. Fixed parameters: $\tau = 0.88$; $T_{refl} = 20°C$ (+68°F); $T_{atm} = 20°C$ (+68°F).

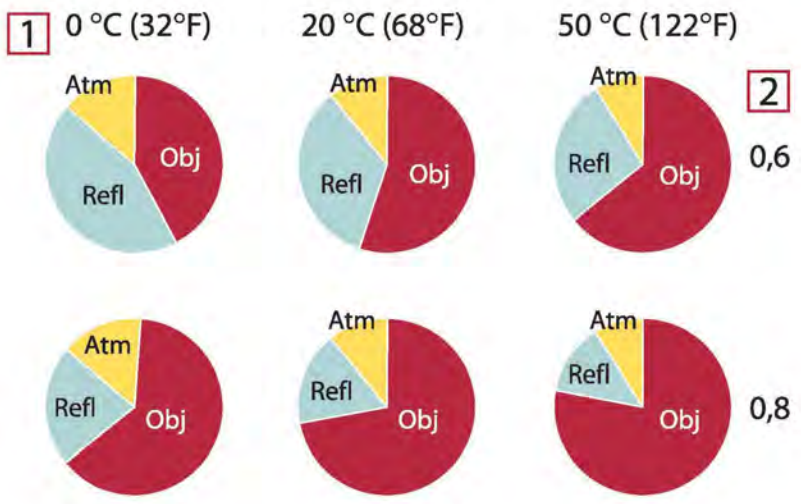

Figure 33.3 Relative magnitudes of radiation sources under varying measurement conditions (LW camera). 1: Object temperature; 2: Emittance; Obj: Object radiation; Refl: Reflected radiation; Atm: atmosphere radiation. Fixed parameters: $\tau = 0.88$; $T_{refl} = 20°C$ (+68°F); $T_{atm} = 20°C$ (+68°F).

34 Emissivity tables

This section presents a compilation of emissivity data from the infrared literature and measurements made by FLIR Systems.

34.1 References

1. Mikaél A. Bramson: *Infrared Radiation, A Handbook for Applications*, Plenum press, N.Y.
2. William L. Wolfe, George J. Zissis: *The Infrared Handbook*, Office of Naval Research, Department of Navy, Washington, D.C.
3. Madding, R. P.: *Thermographic Instruments and systems*. Madison, Wisconsin: University of Wisconsin – Extension, Department of Engineering and Applied Science.
4. William L. Wolfe: *Handbook of Military Infrared Technology*, Office of Naval Research, Department of Navy, Washington, D.C.
5. Jones, Smith, Probert: *External thermography of buildings...,* Proc. of the Society of Photo-Optical Instrumentation Engineers, vol.110, Industrial and Civil Applications of Infrared Technology, June 1977 London.
6. Paljak, Pettersson: *Thermography of Buildings*, Swedish Building Research Institute, Stockholm 1972.
7. Vlcek, J: *Determination of emissivity with imaging radiometers and some emissivities at λ = 5 µm.* Photogrammetric Engineering and Remote Sensing.
8. Kern: *Evaluation of infrared emission of clouds and ground as measured by weather satellites*, Defence Documentation Center, AD 617 417.
9. Öhman, Claes: *Emittansmätningar med AGEMA E-Box*. Teknisk rapport, AGEMA 1999. (Emittance measurements using AGEMA E-Box. Technical report, AGEMA 1999.)
10. Matteï, S., Tang-Kwor, E: *Emissivity measurements for Nextel Velvet coating 811-21 between –36°C AND 82°C.*
11. Lohrengel & Todtenhaupt (1996)
12. ITC Technical publication 32.
13. ITC Technical publication 29.
14. Schuster, Norbert and Kolobrodov, Valentin G. *Infrarotthermographie*. Berlin: Wiley-VCH, 2000.

Note The emissivity values in the table below are recorded using a shortwave (SW) camera. The values should be regarded as recommendations only and used with caution.

34.2 Tables

Table 34.1 T: Total spectrum; SW: 2–5 µm; LW: 8–14 µm, LLW: 6.5–20 µm; 1: Material; 2: Specification; 3:Temperature in °C; 4: Spectrum; 5: Emissivity: 6:Reference

1	2	3	4	5	6
3M type 35	Vinyl electrical tape (several colors)	< 80	LW	≈ 0.96	13
3M type 88	Black vinyl electrical tape	< 105	LW	≈ 0.96	13
3M type 88	Black vinyl electrical tape	< 105	MW	< 0.96	13
3M type Super 33 +	Black vinyl electrical tape	< 80	LW	≈ 0.96	13
Aluminum	anodized sheet	100	T	0.55	2
Aluminum	anodized, black, dull	70	SW	0.67	9
Aluminum	anodized, black, dull	70	LW	0.95	9
Aluminum	anodized, light gray, dull	70	SW	0.61	9

Table 34.1 T: Total spectrum; SW: 2–5 µm; LW: 8–14 µm, LLW: 6.5–20 µm; 1: Material; 2: Specification; 3:Temperature in °C; 4: Spectrum; 5: Emissivity: 6:Reference (continued)

1	2	3	4	5	6
Aluminum	anodized, light gray, dull	70	LW	0.97	9
Aluminum	as received, plate	100	T	0.09	4
Aluminum	as received, sheet	100	T	0.09	2
Aluminum	cast, blast cleaned	70	SW	0.47	9
Aluminum	cast, blast cleaned	70	LW	0.46	9
Aluminum	dipped in HNO_3, plate	100	T	0.05	4
Aluminum	foil	27	10 µm	0.04	3
Aluminum	foil	27	3 µm	0.09	3
Aluminum	oxidized, strongly	50–500	T	0.2–0.3	1
Aluminum	polished	50–100	T	0.04–0.06	1
Aluminum	polished plate	100	T	0.05	4
Aluminum	polished, sheet	100	T	0.05	2
Aluminum	rough surface	20–50	T	0.06–0.07	1
Aluminum	roughened	27	10 µm	0.18	3
Aluminum	roughened	27	3 µm	0.28	3
Aluminum	sheet, 4 samples differently scratched	70	SW	0.05–0.08	9
Aluminum	sheet, 4 samples differently scratched	70	LW	0.03–0.06	9
Aluminum	vacuum deposited	20	T	0.04	2
Aluminum	weathered, heavily	17	SW	0.83–0.94	5
Aluminum bronze		20	T	0.60	1
Aluminum hydroxide	powder		T	0.28	1
Aluminum oxide	activated, powder		T	0.46	1
Aluminum oxide	pure, powder (alumina)		T	0.16	1
Asbestos	board	20	T	0.96	1
Asbestos	fabric		T	0.78	1
Asbestos	floor tile	35	SW	0.94	7
Asbestos	paper	40–400	T	0.93–0.95	1
Asbestos	powder		T	0.40–0.60	1
Asbestos	slate	20	T	0.96	1
Asphalt paving		4	LLW	0.967	8
Brass	dull, tarnished	20–350	T	0.22	1
Brass	oxidized	100	T	0.61	2
Brass	oxidized	70	SW	0.04–0.09	9
Brass	oxidized	70	LW	0.03–0.07	9
Brass	oxidized at 600°C	200–600	T	0.59–0.61	1

Table 34.1 T: Total spectrum; SW: 2–5 µm; LW: 8–14 µm, LLW: 6.5–20 µm; 1: Material; 2: Specification; 3:Temperature in °C; 4: Spectrum; 5: Emissivity: 6:Reference (continued)

1	2	3	4	5	6
Brass	polished	200	T	0.03	1
Brass	polished, highly	100	T	0.03	2
Brass	rubbed with 80-grit emery	20	T	0.20	2
Brass	sheet, rolled	20	T	0.06	1
Brass	sheet, worked with emery	20	T	0.2	1
Brick	alumina	17	SW	0.68	5
Brick	common	17	SW	0.86–0.81	5
Brick	Dinas silica, glazed, rough	1100	T	0.85	1
Brick	Dinas silica, refractory	1000	T	0.66	1
Brick	Dinas silica, un-glazed, rough	1000	T	0.80	1
Brick	firebrick	17	SW	0.68	5
Brick	fireclay	1000	T	0.75	1
Brick	fireclay	1200	T	0.59	1
Brick	fireclay	20	T	0.85	1
Brick	masonry	35	SW	0.94	7
Brick	masonry, plastered	20	T	0.94	1
Brick	red, common	20	T	0.93	2
Brick	red, rough	20	T	0.88–0.93	1
Brick	refractory, corundum	1000	T	0.46	1
Brick	refractory, magnesite	1000–1300	T	0.38	1
Brick	refractory, strongly radiating	500–1000	T	0.8–0.9	1
Brick	refractory, weakly radiating	500–1000	T	0.65–0.75	1
Brick	silica, 95% SiO_2	1230	T	0.66	1
Brick	sillimanite, 33% SiO_2, 64% Al_2O_3	1500	T	0.29	1
Brick	waterproof	17	SW	0.87	5
Bronze	phosphor bronze	70	SW	0.08	9
Bronze	phosphor bronze	70	LW	0.06	9
Bronze	polished	50	T	0.1	1
Bronze	porous, rough	50–150	T	0.55	1
Bronze	powder		T	0.76–0.80	1
Carbon	candle soot	20	T	0.95	2
Carbon	charcoal powder		T	0.96	1
Carbon	graphite powder		T	0.97	1
Carbon	graphite, filed surface	20	T	0.98	2
Carbon	lampblack	20–400	T	0.95–0.97	1

Table 34.1 T: Total spectrum; SW: 2–5 µm; LW: 8–14 µm, LLW: 6.5–20 µm; 1: Material; 2: Specification; 3:Temperature in °C; 4: Spectrum; 5: Emissivity: 6:Reference (continued)

1	2	3	4	5	6
Chipboard	untreated	20	SW	0.90	6
Chromium	polished	50	T	0.10	1
Chromium	polished	500–1000	T	0.28–0.38	1
Clay	fired	70	T	0.91	1
Cloth	black	20	T	0.98	1
Concrete		20	T	0.92	2
Concrete	dry	36	SW	0.95	7
Concrete	rough	17	SW	0.97	5
Concrete	walkway	5	LLW	0.974	8
Copper	commercial, burnished	20	T	0.07	1
Copper	electrolytic, carefully polished	80	T	0.018	1
Copper	electrolytic, polished	–34	T	0.006	4
Copper	molten	1100–1300	T	0.13–0.15	1
Copper	oxidized	50	T	0.6–0.7	1
Copper	oxidized to blackness		T	0.88	1
Copper	oxidized, black	27	T	0.78	4
Copper	oxidized, heavily	20	T	0.78	2
Copper	polished	50–100	T	0.02	1
Copper	polished	100	T	0.03	2
Copper	polished, commercial	27	T	0.03	4
Copper	polished, mechanical	22	T	0.015	4
Copper	pure, carefully prepared surface	22	T	0.008	4
Copper	scraped	27	T	0.07	4
Copper dioxide	powder		T	0.84	1
Copper oxide	red, powder		T	0.70	1
Ebonite			T	0.89	1
Emery	coarse	80	T	0.85	1
Enamel		20	T	0.9	1
Enamel	lacquer	20	T	0.85–0.95	1
Fiber board	hard, untreated	20	SW	0.85	6
Fiber board	masonite	70	SW	0.75	9
Fiber board	masonite	70	LW	0.88	9
Fiber board	particle board	70	SW	0.77	9
Fiber board	particle board	70	LW	0.89	9
Fiber board	porous, untreated	20	SW	0.85	6
Glass pane (float glass)	non-coated	20	LW	0.97	14
Gold	polished	130	T	0.018	1

Table 34.1 T: Total spectrum; SW: 2–5 µm; LW: 8–14 µm, LLW: 6.5–20 µm; 1: Material; 2: Specification; 3:Temperature in °C; 4: Spectrum; 5: Emissivity: 6:Reference (continued)

1	2	3	4	5	6
Gold	polished, carefully	200–600	T	0.02–0.03	1
Gold	polished, highly	100	T	0.02	2
Granite	polished	20	LLW	0.849	8
Granite	rough	21	LLW	0.879	8
Granite	rough, 4 different samples	70	SW	0.95–0.97	9
Granite	rough, 4 different samples	70	LW	0.77–0.87	9
Gypsum		20	T	0.8–0.9	1
Ice: See Water					
Iron and steel	cold rolled	70	SW	0.20	9
Iron and steel	cold rolled	70	LW	0.09	9
Iron and steel	covered with red rust	20	T	0.61–0.85	1
Iron and steel	electrolytic	100	T	0.05	4
Iron and steel	electrolytic	22	T	0.05	4
Iron and steel	electrolytic	260	T	0.07	4
Iron and steel	electrolytic, carefully polished	175–225	T	0.05–0.06	1
Iron and steel	freshly worked with emery	20	T	0.24	1
Iron and steel	ground sheet	950–1100	T	0.55–0.61	1
Iron and steel	heavily rusted sheet	20	T	0.69	2
Iron and steel	hot rolled	130	T	0.60	1
Iron and steel	hot rolled	20	T	0.77	1
Iron and steel	oxidized	100	T	0.74	4
Iron and steel	oxidized	100	T	0.74	1
Iron and steel	oxidized	1227	T	0.89	4
Iron and steel	oxidized	125–525	T	0.78–0.82	1
Iron and steel	oxidized	200	T	0.79	2
Iron and steel	oxidized	200–600	T	0.80	1
Iron and steel	oxidized strongly	50	T	0.88	1
Iron and steel	oxidized strongly	500	T	0.98	1
Iron and steel	polished	100	T	0.07	2
Iron and steel	polished	400–1000	T	0.14–0.38	1
Iron and steel	polished sheet	750–1050	T	0.52–0.56	1
Iron and steel	rolled sheet	50	T	0.56	1
Iron and steel	rolled, freshly	20	T	0.24	1
Iron and steel	rough, plane surface	50	T	0.95–0.98	1
Iron and steel	rusted red, sheet	22	T	0.69	4
Iron and steel	rusted, heavily	17	SW	0.96	5
Iron and steel	rusty, red	20	T	0.69	1
Iron and steel	shiny oxide layer, sheet,	20	T	0.82	1

Table 34.1 T: Total spectrum; SW: 2–5 µm; LW: 8–14 µm, LLW: 6.5–20 µm; 1: Material; 2: Specification; 3:Temperature in °C; 4: Spectrum; 5: Emissivity: 6:Reference (continued)

1	2	3	4	5	6
Iron and steel	shiny, etched	150	T	0.16	1
Iron and steel	wrought, carefully polished	40–250	T	0.28	1
Iron galvanized	heavily oxidized	70	SW	0.64	9
Iron galvanized	heavily oxidized	70	LW	0.85	9
Iron galvanized	sheet	92	T	0.07	4
Iron galvanized	sheet, burnished	30	T	0.23	1
Iron galvanized	sheet, oxidized	20	T	0.28	1
Iron tinned	sheet	24	T	0.064	4
Iron, cast	casting	50	T	0.81	1
Iron, cast	ingots	1000	T	0.95	1
Iron, cast	liquid	1300	T	0.28	1
Iron, cast	machined	800–1000	T	0.60–0.70	1
Iron, cast	oxidized	100	T	0.64	2
Iron, cast	oxidized	260	T	0.66	4
Iron, cast	oxidized	38	T	0.63	4
Iron, cast	oxidized	538	T	0.76	4
Iron, cast	oxidized at 600°C	200–600	T	0.64–0.78	1
Iron, cast	polished	200	T	0.21	1
Iron, cast	polished	38	T	0.21	4
Iron, cast	polished	40	T	0.21	2
Iron, cast	unworked	900–1100	T	0.87–0.95	1
Krylon Ultra-flat black 1602	Flat black	Room tempera-ture up to 175	LW	≈ 0.96	12
Krylon Ultra-flat black 1602	Flat black	Room tempera-ture up to 175	MW	≈ 0.97	12
Lacquer	3 colors sprayed on Aluminum	70	SW	0.50–0.53	9
Lacquer	3 colors sprayed on Aluminum	70	LW	0.92–0.94	9
Lacquer	Aluminum on rough surface	20	T	0.4	1
Lacquer	bakelite	80	T	0.83	1
Lacquer	black, dull	40–100	T	0.96–0.98	1
Lacquer	black, matte	100	T	0.97	2
Lacquer	black, shiny, sprayed on iron	20	T	0.87	1
Lacquer	heat–resistant	100	T	0.92	1
Lacquer	white	100	T	0.92	2
Lacquer	white	40–100	T	0.8–0.95	1
Lead	oxidized at 200°C	200	T	0.63	1
Lead	oxidized, gray	20	T	0.28	1
Lead	oxidized, gray	22	T	0.28	4
Lead	shiny	250	T	0.08	1

Table 34.1 T: Total spectrum; SW: 2–5 µm; LW: 8–14 µm, LLW: 6.5–20 µm; 1: Material; 2: Specification; 3:Temperature in °C; 4: Spectrum; 5: Emissivity: 6:Reference (continued)

1	2	3	4	5	6
Lead	unoxidized, polished	100	T	0.05	4
Lead red		100	T	0.93	4
Lead red, powder		100	T	0.93	1
Leather	tanned		T	0.75–0.80	1
Lime			T	0.3–0.4	1
Magnesium		22	T	0.07	4
Magnesium		260	T	0.13	4
Magnesium		538	T	0.18	4
Magnesium	polished	20	T	0.07	2
Magnesium powder			T	0.86	1
Molybdenum		1500–2200	T	0.19–0.26	1
Molybdenum		600–1000	T	0.08–0.13	1
Molybdenum	filament	700–2500	T	0.1–0.3	1
Mortar		17	SW	0.87	5
Mortar	dry	36	SW	0.94	7
Nextel Velvet 811-21 Black	Flat black	–60–150	LW	> 0.97	10 and 11
Nichrome	rolled	700	T	0.25	1
Nichrome	sandblasted	700	T	0.70	1
Nichrome	wire, clean	50	T	0.65	1
Nichrome	wire, clean	500–1000	T	0.71–0.79	1
Nichrome	wire, oxidized	50–500	T	0.95–0.98	1
Nickel	bright matte	122	T	0.041	4
Nickel	commercially pure, polished	100	T	0.045	1
Nickel	commercially pure, polished	200–400	T	0.07–0.09	1
Nickel	electrolytic	22	T	0.04	4
Nickel	electrolytic	260	T	0.07	4
Nickel	electrolytic	38	T	0.06	4
Nickel	electrolytic	538	T	0.10	4
Nickel	electroplated on iron, polished	22	T	0.045	4
Nickel	electroplated on iron, unpolished	20	T	0.11–0.40	1
Nickel	electroplated on iron, unpolished	22	T	0.11	4
Nickel	electroplated, polished	20	T	0.05	2
Nickel	oxidized	1227	T	0.85	4
Nickel	oxidized	200	T	0.37	2
Nickel	oxidized	227	T	0.37	4
Nickel	oxidized at 600°C	200–600	T	0.37–0.48	1
Nickel	polished	122	T	0.045	4

Table 34.1 T: Total spectrum; SW: 2–5 µm; LW: 8–14 µm, LLW: 6.5–20 µm; 1: Material; 2: Specification; 3:Temperature in °C; 4: Spectrum; 5: Emissivity: 6:Reference (continued)

1	2	3	4	5	6
Nickel	wire	200–1000	T	0.1–0.2	1
Nickel oxide		1000–1250	T	0.75–0.86	1
Nickel oxide		500–650	T	0.52–0.59	1
Oil, lubricating	0.025 mm film	20	T	0.27	2
Oil, lubricating	0.050 mm film	20	T	0.46	2
Oil, lubricating	0.125 mm film	20	T	0.72	2
Oil, lubricating	film on Ni base: Ni base only	20	T	0.05	2
Oil, lubricating	thick coating	20	T	0.82	2
Paint	8 different colors and qualities	70	SW	0.88–0.96	9
Paint	8 different colors and qualities	70	LW	0.92–0.94	9
Paint	Aluminum, various ages	50–100	T	0.27–0.67	1
Paint	cadmium yellow		T	0.28–0.33	1
Paint	chrome green		T	0.65–0.70	1
Paint	cobalt blue		T	0.7–0.8	1
Paint	oil	17	SW	0.87	5
Paint	oil based, average of 16 colors	100	T	0.94	2
Paint	oil, black flat	20	SW	0.94	6
Paint	oil, black gloss	20	SW	0.92	6
Paint	oil, gray flat	20	SW	0.97	6
Paint	oil, gray gloss	20	SW	0.96	6
Paint	oil, various colors	100	T	0.92–0.96	1
Paint	plastic, black	20	SW	0.95	6
Paint	plastic, white	20	SW	0.84	6
Paper	4 different colors	70	SW	0.68–0.74	9
Paper	4 different colors	70	LW	0.92–0.94	9
Paper	black		T	0.90	1
Paper	black, dull		T	0.94	1
Paper	black, dull	70	SW	0.86	9
Paper	black, dull	70	LW	0.89	9
Paper	blue, dark		T	0.84	1
Paper	coated with black lacquer		T	0.93	1
Paper	green		T	0.85	1
Paper	red		T	0.76	1
Paper	white	20	T	0.7–0.9	1
Paper	white bond	20	T	0.93	2
Paper	white, 3 different glosses	70	SW	0.76–0.78	9
Paper	white, 3 different glosses	70	LW	0.88–0.90	9

Table 34.1 T: Total spectrum; SW: 2–5 µm; LW: 8–14 µm, LLW: 6.5–20 µm; 1: Material; 2: Specification; 3:Temperature in °C; 4: Spectrum; 5: Emissivity: 6:Reference (continued)

1	2	3	4	5	6
Paper	yellow		T	0.72	1
Plaster		17	SW	0.86	5
Plaster	plasterboard, untreated	20	SW	0.90	6
Plaster	rough coat	20	T	0.91	2
Plastic	glass fibre laminate (printed circ. board)	70	SW	0.94	9
Plastic	glass fibre laminate (printed circ. board)	70	LW	0.91	9
Plastic	polyurethane isolation board	70	LW	0.55	9
Plastic	polyurethane isolation board	70	SW	0.29	9
Plastic	PVC, plastic floor, dull, structured	70	SW	0.94	9
Plastic	PVC, plastic floor, dull, structured	70	LW	0.93	9
Platinum		100	T	0.05	4
Platinum		1000–1500	T	0.14–0.18	1
Platinum		1094	T	0.18	4
Platinum		17	T	0.016	4
Platinum		22	T	0.03	4
Platinum		260	T	0.06	4
Platinum		538	T	0.10	4
Platinum	pure, polished	200–600	T	0.05–0.10	1
Platinum	ribbon	900–1100	T	0.12–0.17	1
Platinum	wire	1400	T	0.18	1
Platinum	wire	500–1000	T	0.10–0.16	1
Platinum	wire	50–200	T	0.06–0.07	1
Porcelain	glazed	20	T	0.92	1
Porcelain	white, shiny		T	0.70–0.75	1
Rubber	hard	20	T	0.95	1
Rubber	soft, gray, rough	20	T	0.95	1
Sand			T	0.60	1
Sand		20	T	0.90	2
Sandstone	polished	19	LLW	0.909	8
Sandstone	rough	19	LLW	0.935	8
Silver	polished	100	T	0.03	2
Silver	pure, polished	200–600	T	0.02–0.03	1
Skin	human	32	T	0.98	2
Slag	boiler	0–100	T	0.97–0.93	1
Slag	boiler	1400–1800	T	0.69–0.67	1
Slag	boiler	200–500	T	0.89–0.78	1
Slag	boiler	600–1200	T	0.76–0.70	1
Snow: See Water					

Table 34.1 T: Total spectrum; SW: 2–5 µm; LW: 8–14 µm, LLW: 6.5–20 µm; 1: Material; 2: Specification; 3:Temperature in °C; 4: Spectrum; 5: Emissivity: 6:Reference (continued)

1	2	3	4	5	6
Soil	dry	20	T	0.92	2
Soil	saturated with water	20	T	0.95	2
Stainless steel	alloy, 8% Ni, 18% Cr	500	T	0.35	1
Stainless steel	rolled	700	T	0.45	1
Stainless steel	sandblasted	700	T	0.70	1
Stainless steel	sheet, polished	70	SW	0.18	9
Stainless steel	sheet, polished	70	LW	0.14	9
Stainless steel	sheet, untreated, somewhat scratched	70	SW	0.30	9
Stainless steel	sheet, untreated, somewhat scratched	70	LW	0.28	9
Stainless steel	type 18-8, buffed	20	T	0.16	2
Stainless steel	type 18-8, oxi-dized at 800°C	60	T	0.85	2
Stucco	rough, lime	10–90	T	0.91	1
Styrofoam	insulation	37	SW	0.60	7
Tar			T	0.79–0.84	1
Tar	paper	20	T	0.91–0.93	1
Tile	glazed	17	SW	0.94	5
Tin	burnished	20–50	T	0.04–0.06	1
Tin	tin–plated sheet iron	100	T	0.07	2
Titanium	oxidized at 540°C	1000	T	0.60	1
Titanium	oxidized at 540°C	200	T	0.40	1
Titanium	oxidized at 540°C	500	T	0.50	1
Titanium	polished	1000	T	0.36	1
Titanium	polished	200	T	0.15	1
Titanium	polished	500	T	0.20	1
Tungsten		1500–2200	T	0.24–0.31	1
Tungsten		200	T	0.05	1
Tungsten		600–1000	T	0.1–0.16	1
Tungsten	filament	3300	T	0.39	1
Varnish	flat	20	SW	0.93	6
Varnish	on oak parquet floor	70	SW	0.90	9
Varnish	on oak parquet floor	70	LW	0.90–0.93	9
Wallpaper	slight pattern, light gray	20	SW	0.85	6
Wallpaper	slight pattern, red	20	SW	0.90	6
Water	distilled	20	T	0.96	2
Water	frost crystals	–10	T	0.98	2
Water	ice, covered with heavy frost	0	T	0.98	1

Table 34.1 T: Total spectrum; SW: 2–5 µm; LW: 8–14 µm, LLW: 6.5–20 µm; 1: Material; 2: Specification; 3:Temperature in °C; 4: Spectrum; 5: Emissivity: 6:Reference (continued)

1	2	3	4	5	6
Water	ice, smooth	0	T	0.97	1
Water	ice, smooth	–10	T	0.96	2
Water	layer >0.1 mm thick	0–100	T	0.95–0.98	1
Water	snow		T	0.8	1
Water	snow	–10	T	0.85	2
Wood		17	SW	0.98	5
Wood		19	LLW	0.962	8
Wood	ground		T	0.5–0.7	1
Wood	pine, 4 different samples	70	SW	0.67–0.75	9
Wood	pine, 4 different samples	70	LW	0.81–0.89	9
Wood	planed	20	T	0.8–0.9	1
Wood	planed oak	20	T	0.90	2
Wood	planed oak	70	SW	0.77	9
Wood	planed oak	70	LW	0.88	9
Wood	plywood, smooth, dry	36	SW	0.82	7
Wood	plywood, untreated	20	SW	0.83	6
Wood	white, damp	20	T	0.7–0.8	1
Zinc	oxidized at 400°C	400	T	0.11	1
Zinc	oxidized surface	1000–1200	T	0.50–0.60	1
Zinc	polished	200–300	T	0.04–0.05	1
Zinc	sheet	50	T	0.20	1

A note on the technical production of this publication

This publication was produced using XML — the eXtensible Markup Language. For more information about XML, please visit http://www.w3.org/XML/

A note on the typeface used in this publication

This publication was typeset using Linotype Helvetica™ World. Helvetica™ was designed by Max Miedinger (1910–1980)

LOEF (List Of Effective Files)

T501038.xml; en-US; AJ; 37554; 2016-09-30
T505552.xml; en-US; 9599; 2013-11-05
T505699.xml; en-US; 32147; 2016-01-12
T505469.xml; en-US; 23215; 2015-02-19
T505013.xml; en-US; 35155; 2016-04-21
T505700.xml; en-US; 25106; 2015-04-28
T505701.xml; en-US; 32095; 2016-01-12
T505702.xml; en-US; 32095; 2016-01-12
T505703.xml; en-US; 32120; 2016-01-12
T505704.xml; en-US; 32120; 2016-01-12
T505705.xml; en-US; 32120; 2016-01-12
T505706.xml; en-US; 32120; 2016-01-12
T505707.xml; en-US; 32120; 2016-01-12
T505708.xml; en-US; 32527; 2016-01-19
T505709.xml; en-US; 32120; 2016-01-12
T505710.xml; en-US; 32120; 2016-01-12
T505711.xml; en-US; 32120; 2016-01-12
T505713.xml; en-US; 32120; 2016-01-12
T505715.xml; en-US; 32120; 2016-01-12
T505716.xml; en-US; 32120; 2016-01-12
T505787.xml; en-US; 37547; 2016-09-30
T505470.xml; en-US; 12154; 2014-03-06
T505012.xml; en-US; 32556; 2016-01-20
T505007.xml; en-US; 35155; 2016-04-21
T505004.xml; en-US; 35155; 2016-04-21
T505000.xml; en-US; 35155; 2016-04-21
T505005.xml; en-US; 35155; 2016-04-21
T505001.xml; en-US; 32554; 2016-01-20
T505006.xml; en-US; 32555; 2016-01-20
T505002.xml; en-US; 33518; 2016-02-18

Website
http://www.flir.com

Customer support
http://support.flir.com

Copyright
© 2016, FLIR Systems, Inc. All rights reserved worldwide.

Disclaimer
Specifications subject to change without further notice. Models and accessories subject to regional market considerations. License procedures may apply. Products described herein may be subject to US Export Regulations. Please refer to exportquestions@flir.com with any questions.

Publ. No.: T559845
Release: AJ
Commit: 37554
Head: 37554
Language: en-US
Modified: 2016-09-30
Formatted: 2016-09-30

T559845